1. Install four #4 diagonal bars at manhole opening and at all pipe openings.
2. Cast-in-place base shown. If base is precast integral with walls, the footprint of the base is not required to extend beyond the outer edge of the walls.
3. 12 inch minimum wall height above all pipes.

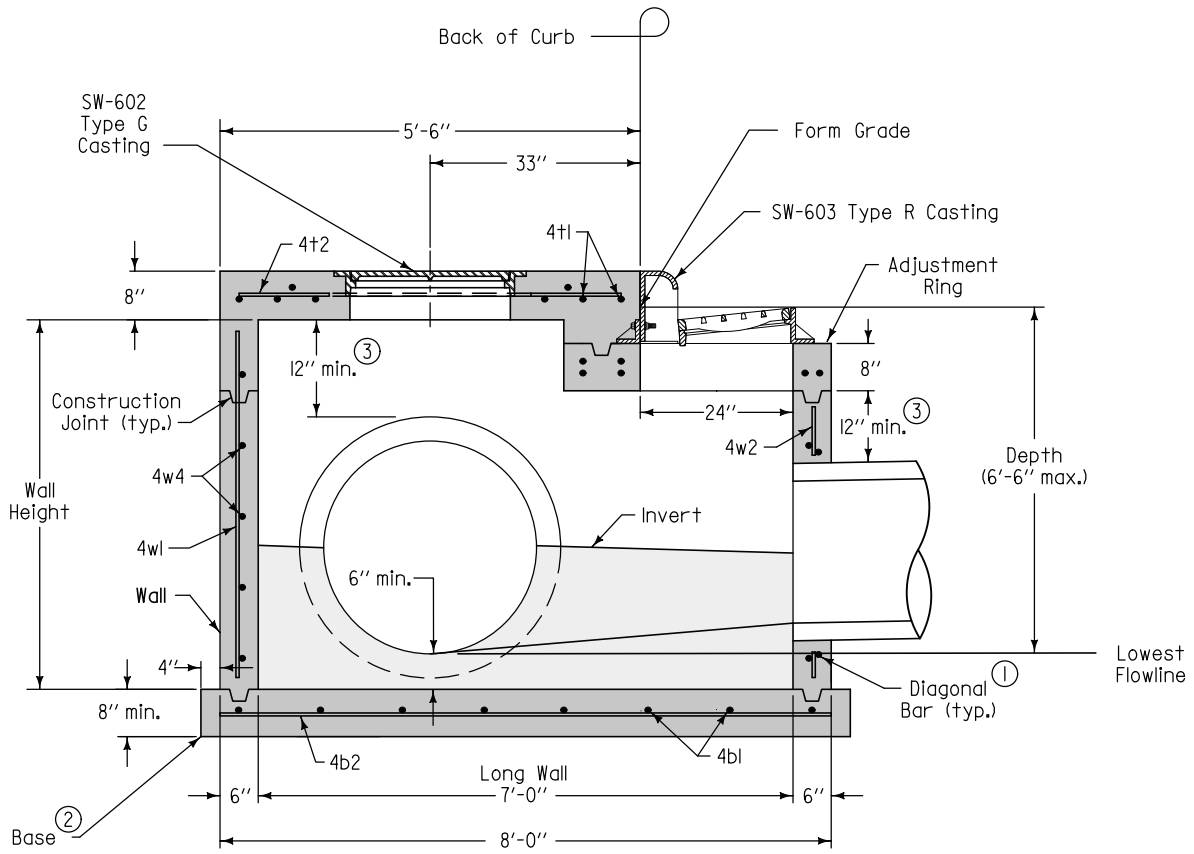

SECTION A-A

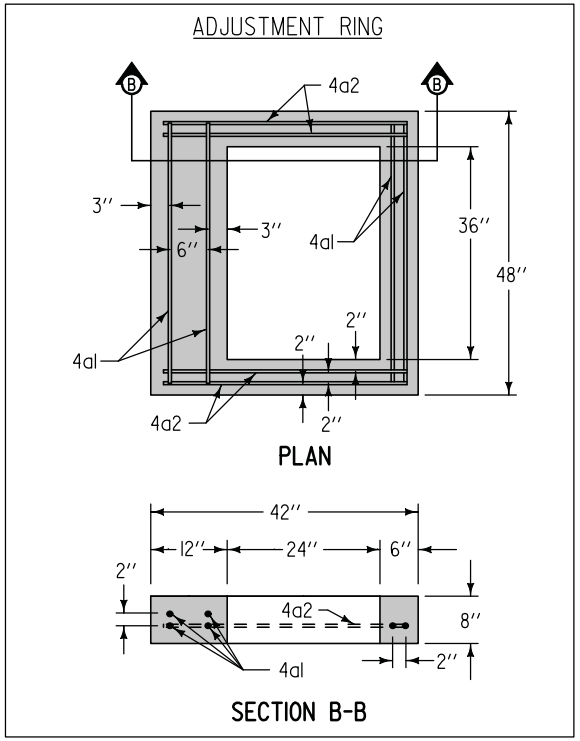

SUDAS	Iowa Department of Transportation	REVISION NEW 04-21-09
FIGURE 6010.504	STANDARD ROAD PLAN	SW-504 SHEET 1 of 2

REVISIONS: New. Replaces SUDAS Special Type "M-C" Intake.

SUDAS DIRECTOR — DESIGN METHODS ENGINEER

SINGLE GRATE INTAKE WITH FLUSH-TOP MANHOLE

FIGURE 6010.504 SHEET 1 OF 2

(1) Install four #4 diagonal bars at manhole opening and at all pipe openings.

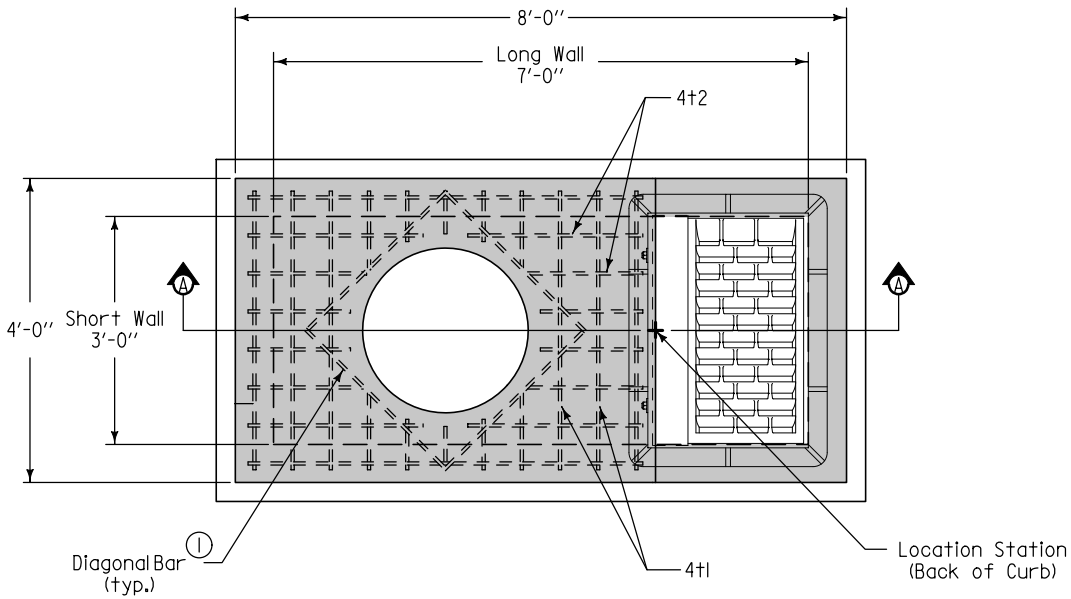

PLAN

REINFORCING BAR LIST						
Mark	Size	Location	Shape	Count	Length	Spacing
4t1	4	Top	——	11	3'-8"	6"
4t2	4	Top	——	8	5'-2"	6"
4b1	4	Base	——	8	4'-2"	13"
4b2	4	Base	——	5	8'-2"	10"
4a1	4	Adj. Ring	——	6	3'-8"	See Adj. Ring Plan
4a2	4	Adj. Ring	——	4	3'-2"	See Adj. Ring Plan
4w1	4	Walls	——	13	Wall Height minus 4"	12"
4w2	4	Walls	——	11	Wall Height minus 16"	12"
4w3	4	Long Walls	——	Varies	7'-8"	12"
4w4	4	Short Walls	——	Varies	3'-8"	12"

MAXIMUM PIPE DIAMETERS		
Pipe Location	Precast Structure	Cast-in-place Structure
Short Wall	18"	24"
Long Wall	30"	36"

SUDAS | Iowa Department of Transportation

REVISION: NEW 04-21-09

FIGURE 6010.504 | STANDARD ROAD PLAN | SW-504 | SHEET 2 of 2

REVISIONS: New. Replaces SUDAS Special Type "M-C" Intake.

SUDAS DIRECTOR | Deanna Maifield, DESIGN METHODS ENGINEER

SINGLE GRATE INTAKE WITH FLUSH-TOP MANHOLE

FIGURE 6010.504 SHEET 2 OF 2