(1) For sewer pipes less than 48 inches in diameter, install eccentric reducers/increasers with a standard tee or utilize a composite tee.

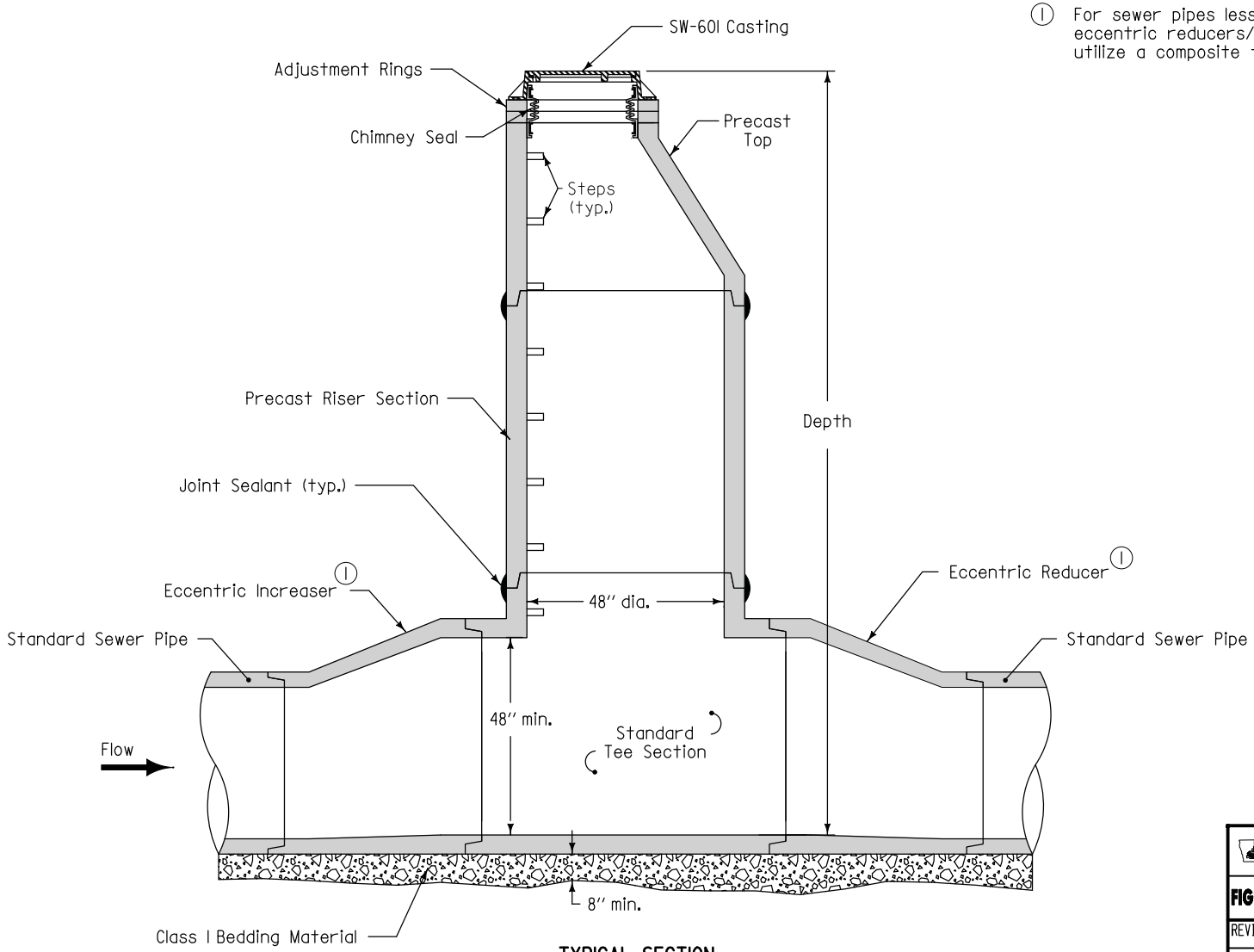

TYPICAL SECTION

STANDARD TEE (1)

SUDAS	Iowa Department of Transportation	REVISION NEW 04-21-09
FIGURE 6010.305	STANDARD ROAD PLAN	SW-305 SHEET 1 of 2

REVISIONS: New. Replaces SUDAS Type "J" Manhole.

SUDAS DIRECTOR — DESIGN METHODS ENGINEER

TEE-SECTION
SANITARY SEWER MANHOLE

FIGURE 6010.305 SHEET 1 OF 2

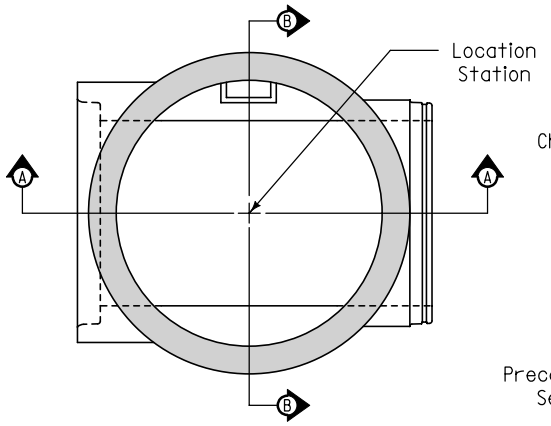

PLAN

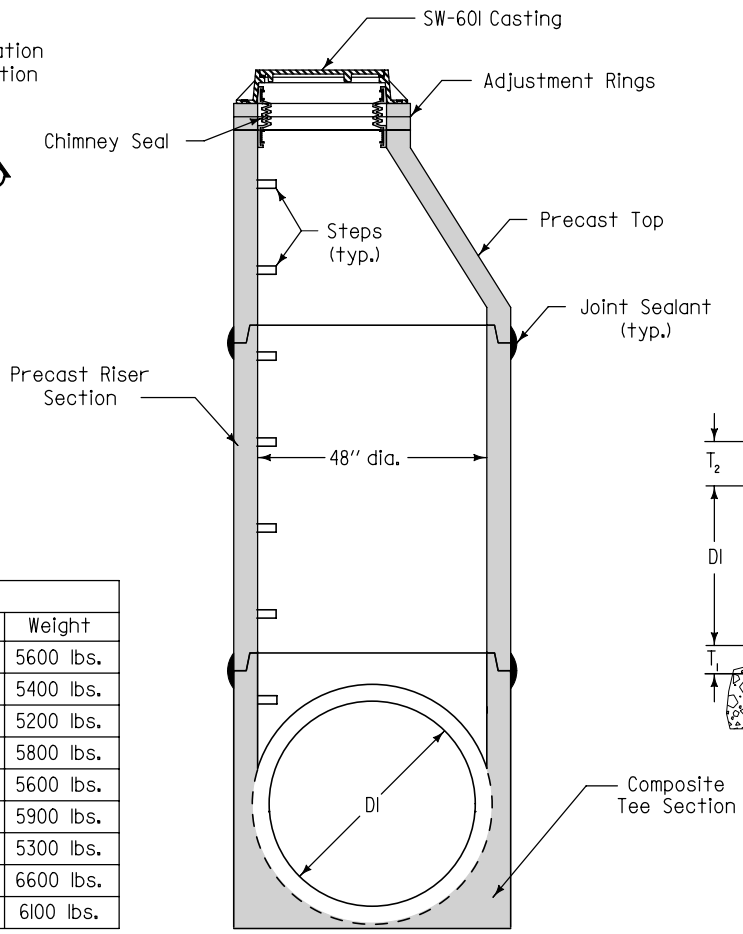

SECTION A-A

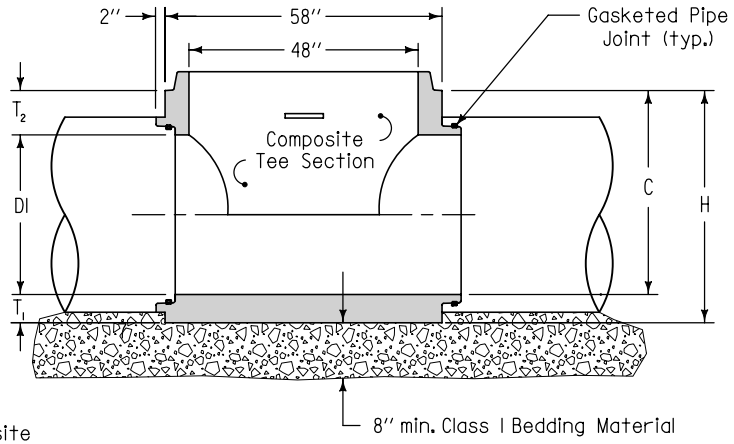

SECTION B-B

COMPOSITE TEE DIMENSIONS						
Size	DI	H	T_1	T_2	C	Weight
48" on 12"	12"	50"	8 1/2"	29 1/2"	41 1/2"	5600 lbs.
48" on 15"	15"	50"	7"	28"	43"	5400 lbs.
48" on 18"	18"	50"	5 1/2"	26 1/2"	44 1/2"	5200 lbs.
48" on 21"	21"	48"	9 1/2"	17 1/2"	38 1/2"	5800 lbs.
48" on 24"	24"	48"	8"	16"	40"	5600 lbs.
48" on 27"	27"	48"	9 1/2"	11 1/2"	38 1/2"	5900 lbs.
48" on 30"	30"	48"	8"	10"	40"	5300 lbs.
48" on 33"	33"	54"	9 1/2"	11 1/2"	44 1/2"	6600 lbs.
48" on 36"	36"	54"	8"	10"	46"	6100 lbs.

COMPOSITE TEE

Alternate to standard tee with eccentric reducer (for pipes 36" and smaller).

SUDAS | Iowa Department of Transportation

REVISION: NEW 04-21-09

FIGURE 6010.305 | STANDARD ROAD PLAN | SW-305 | SHEET 2 of 2

REVISIONS: New. Replaces SUDAS Type "J" Manhole.

SUDAS DIRECTOR | Deanna Maifield, DESIGN METHODS ENGINEER

TEE-SECTION
SANITARY SEWER MANHOLE

FIGURE 6010.305 SHEET 2 OF 2