Adjacent walls may have different widths based upon pipe configuration, but structure must be rectangular.

(1) Provide two #4 hoop bars at top opening and at all pipe openings.

(2) Cast-in-place base shown. If base is precast integral with walls, the footprint of the base is not required to extend beyond the outer edge of the walls.

(3) Wall widths vary with pipe diameter and range from 4 feet minimum to 9 feet maximum. Provide 12 inches of wall width (minimum) each side of pipe opening.

(4) 12 inch minimum wall height above all pipe openings.

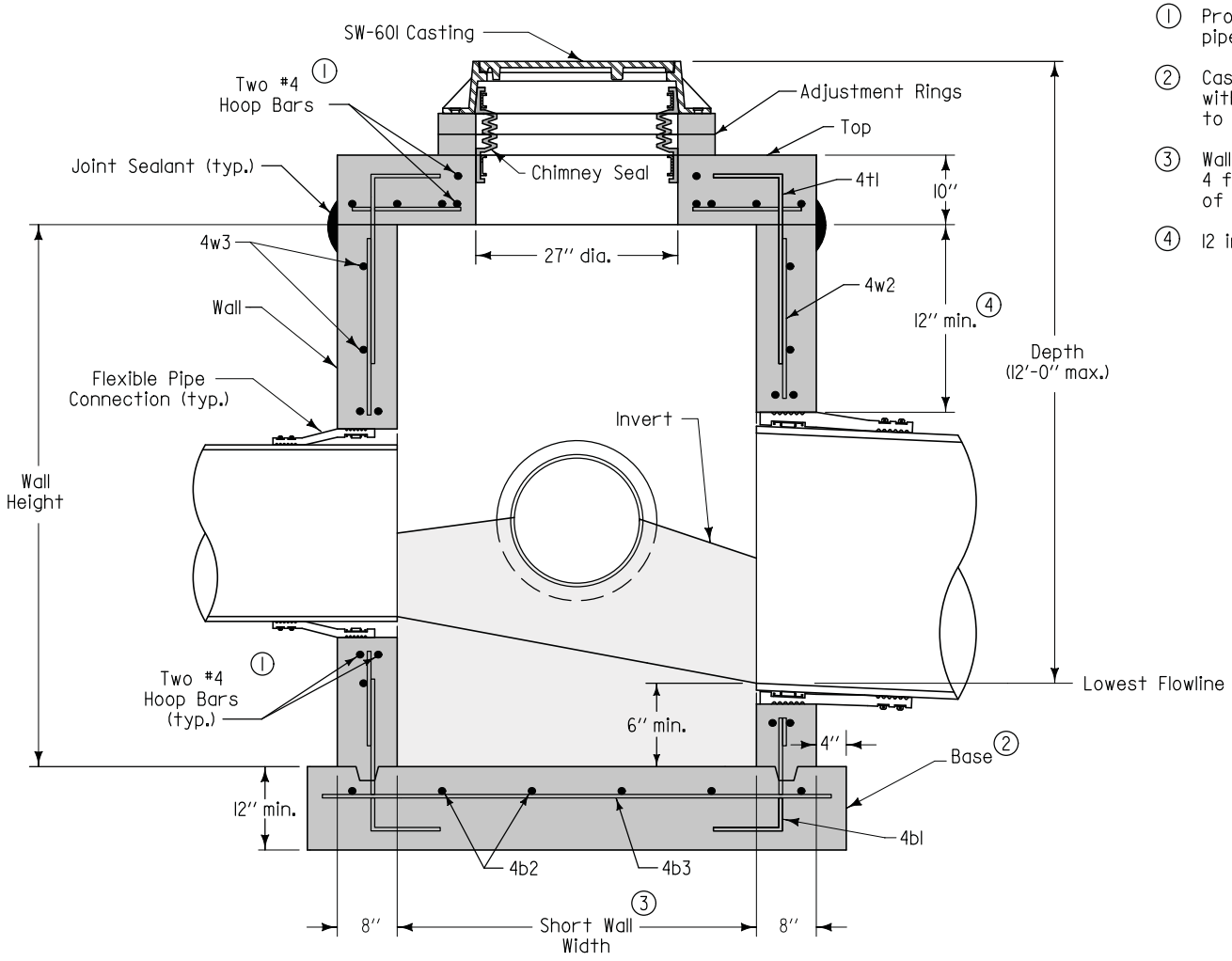


TYPICAL SECTION

| | | |
|---|---|---|
| SUDAS | Iowa Department of Transportation | REVISION: NEW 04-21-09 |
| FIGURE 6010.302 | STANDARD ROAD PLAN | SW-302 SHEET 1 of 2 |

REVISIONS: New. Replaces SUDAS Type "E" Manhole.

SUDAS DIRECTOR — DESIGN METHODS ENGINEER

**RECTANGULAR SANITARY SEWER MANHOLE**

FIGURE 6010.302 SHEET 1 OF 2

① Provide two #4 hoop bars at top opening and at all pipe openings.

② Cast-in-place base shown. If base is precast integral with walls, the footprint of the base is not required to extend beyond the outer edge of the walls.

③ Wall widths vary with pipe diameter and range from 4 feet minimum to 9 feet maximum. Provide 12 inches of wall width (minimum) each side of pipe opening.

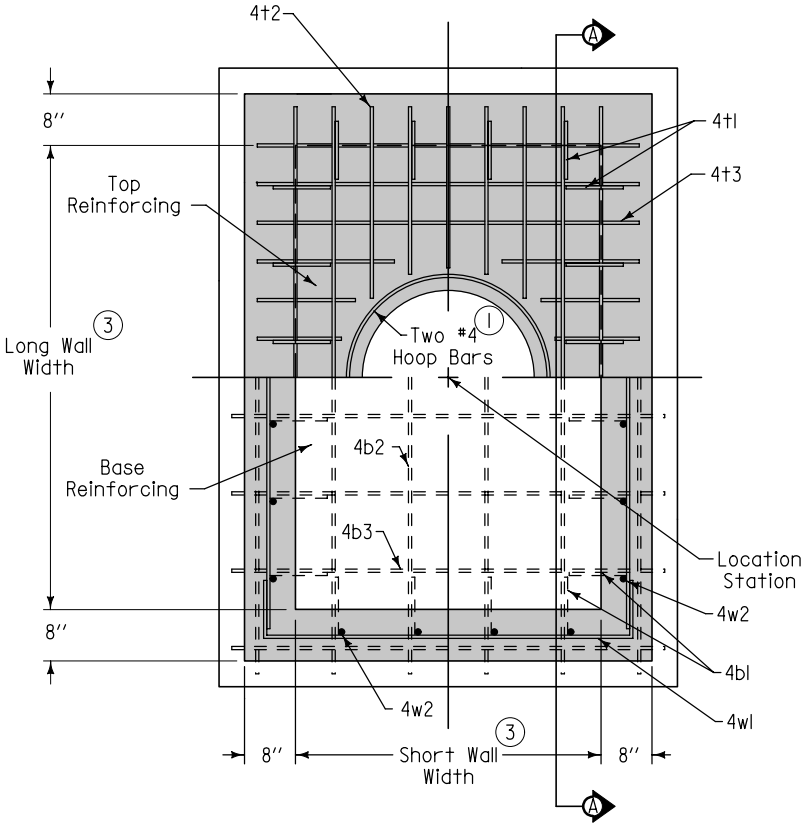


PLAN

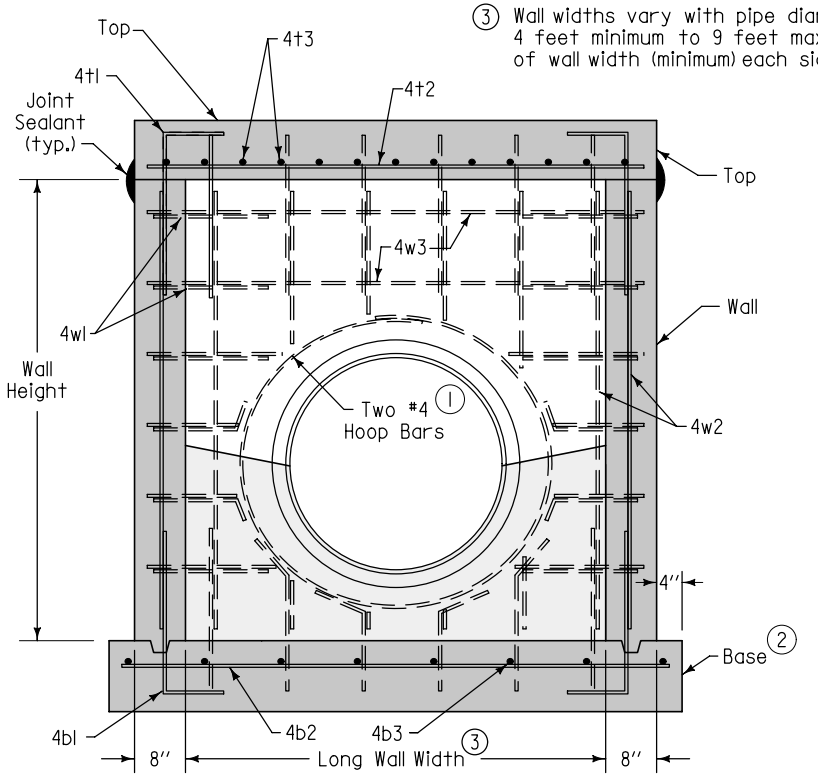


SECTION A-A

| REINFORCING BAR LIST | | | | | |
|---|---|---|---|---|---|
| Mark | Size | Location | Shape | Length | Spacing |
| 4b1 | 4 | Base | ⌋ | 36'' | 12'' |
| 4b2 | 4 | Base | —— | Long Wall plus 18'' | 12'' |
| 4b3 | 4 | Base | —— | Short Wall plus 18'' | 12'' |
| 4t1 | 4 | Top | ⌉ | 36'' | 12'' |
| 4t2 | 4 | Top | —— | Long Wall plus 12'' | 6'' |
| 4t3 | 4 | Top | —— | Short Wall plus 12'' | 6'' |
| 4w1 | 4 | Wall | ⌐⌐ | Short Wall plus 48'' | 12'' |
| 4w2 | 4 | Wall | —— | Wall Height minus 4'' | 12'' |
| 4w3 | 4 | Wall | —— | Long Wall plus 12'' | 12'' |

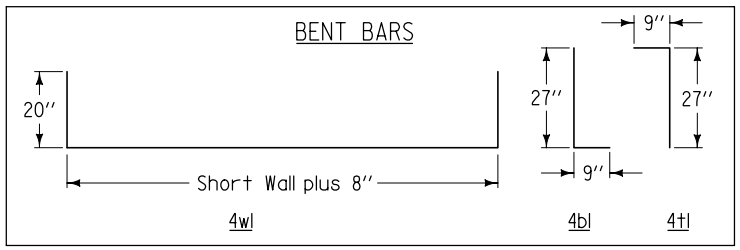


| SUDAS | Iowa Department of Transportation | REVISION NEW 04-21-09 |
|---|---|---|
| FIGURE 6010.302 | STANDARD ROAD PLAN | SW-302 SHEET 2 of 2 |

REVISIONS: New. Replaces SUDAS Type "E" Manhole.

SUDAS DIRECTOR — Deanna Maifield, DESIGN METHODS ENGINEER

**RECTANGULAR SANITARY SEWER MANHOLE**

FIGURE 6010.302 SHEET 2 OF 2