Use ductile iron pipe with restrained mechanical joints for fire hydrant assembly and anchor tee.

(1) Refer to WM-102 for details of tracer system.

(2) Do not cover drain holes or tracer wire.

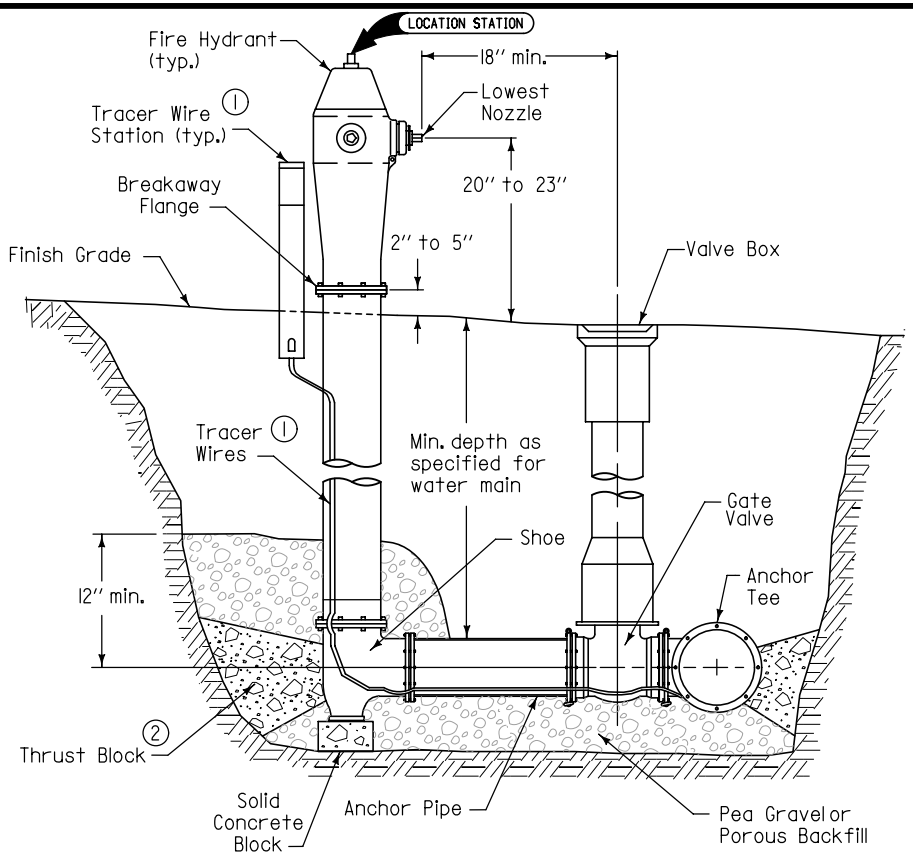

TYPICAL SECTION

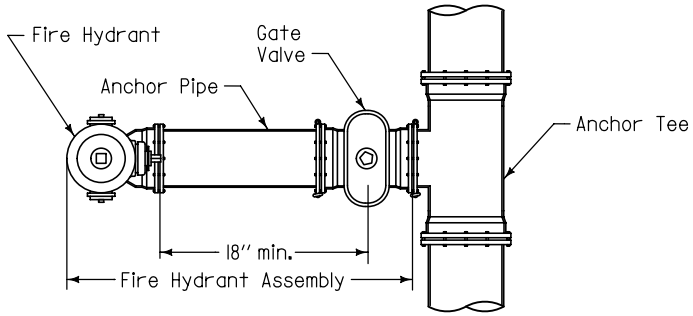

TYPICAL PLAN

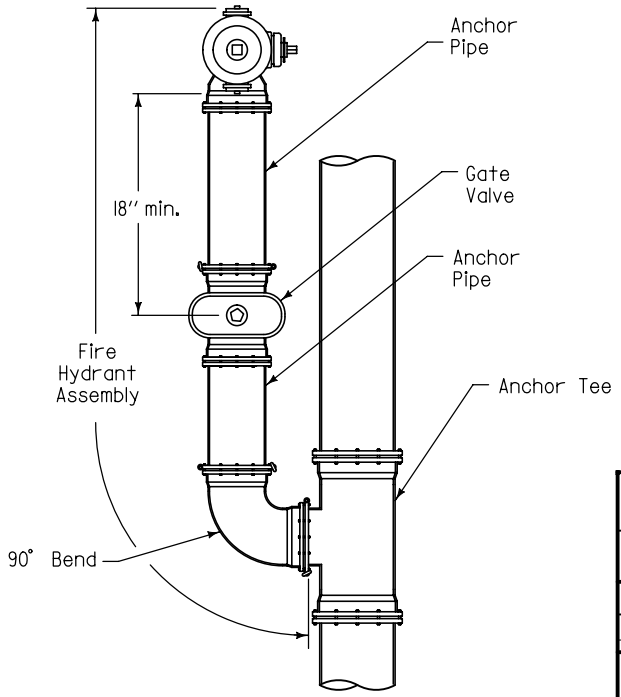

ALTERNATE PLAN

SUDAS	Iowa Department of Transportation	REVISION NEW 04-21-09
FIGURE 5020.201	STANDARD ROAD PLAN	WM-201 SHEET 1 of 1

REVISIONS: New. Replaces SUDAS Figure 5020.1.

SUDAS DIRECTOR — DESIGN METHODS ENGINEER

FIRE HYDRANT ASSEMBLY

FIGURE 5020.201 SHEET 1 OF 1