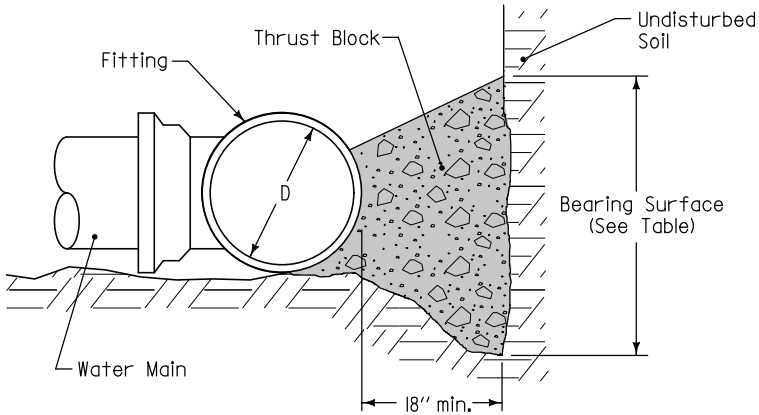

TYPICAL SECTION

Extend thrust blocks to undisturbed soil. Excavation into trench wall may be necessary.

Form vertical surfaces of poured concrete thrust blocks except on bearing surface.

Encase all fittings in polyethylene wrap. Do not allow concrete to directly contact joints or fitting bolts.

Diameter of Pipe, D (inches)	MINIMUM BEARING SURFACE (sf)				
	Bends				Tees and Dead Ends
	11¼°	22½°	45°	90°	
4	1	1	2	4	3
6	1	2	4	8	6
8	2	4	7	14	10
10	3	6	11	21	15
12	4	8	16	29	21
14	5	11	21	39	28
16	7	14	27	50	36
18	9	17	34	63	45
20	11	21	42	78	55
24	15	31	60	111	78
30	24	47	92	171	120
36	34	67	132	244	173

Minimum surface area based on water pressure of 150 psi and allowable soil pressure of 1,000 psf.

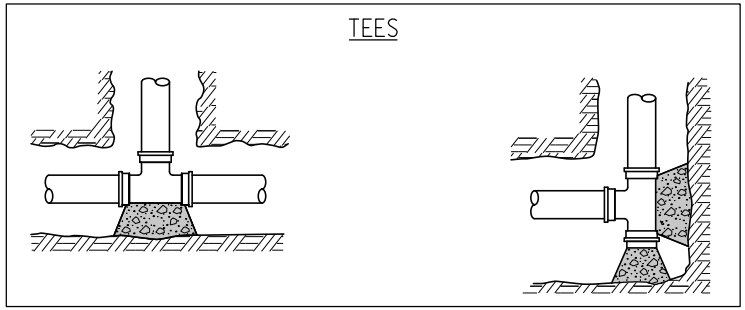

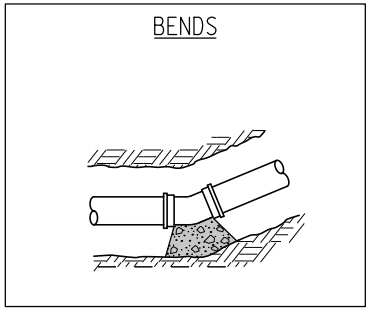

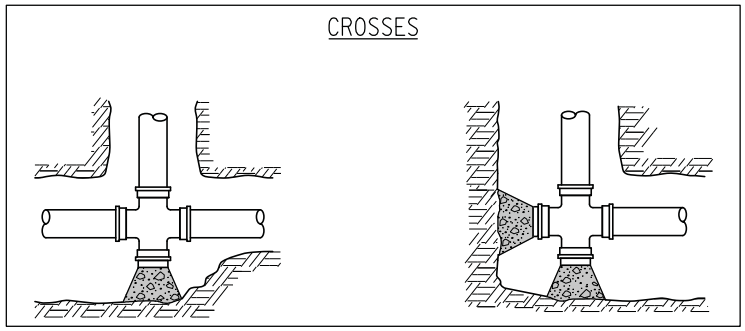

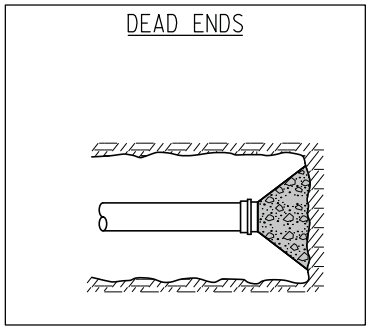

TYPICAL PLAN

SUDAS | Iowa Department of Transportation

REVISION: NEW 04-21-09

FIGURE 5010.101 | STANDARD ROAD PLAN | WM-101 | SHEET 1 of 2

REVISIONS: New. Replaces SUDAS Figure 5010.1

SUDAS DIRECTOR | DESIGN METHODS ENGINEER

THRUST BLOCKS

FIGURE 5010.101 SHEET 1 OF 2

CHANGES IN PIPE DEPTH

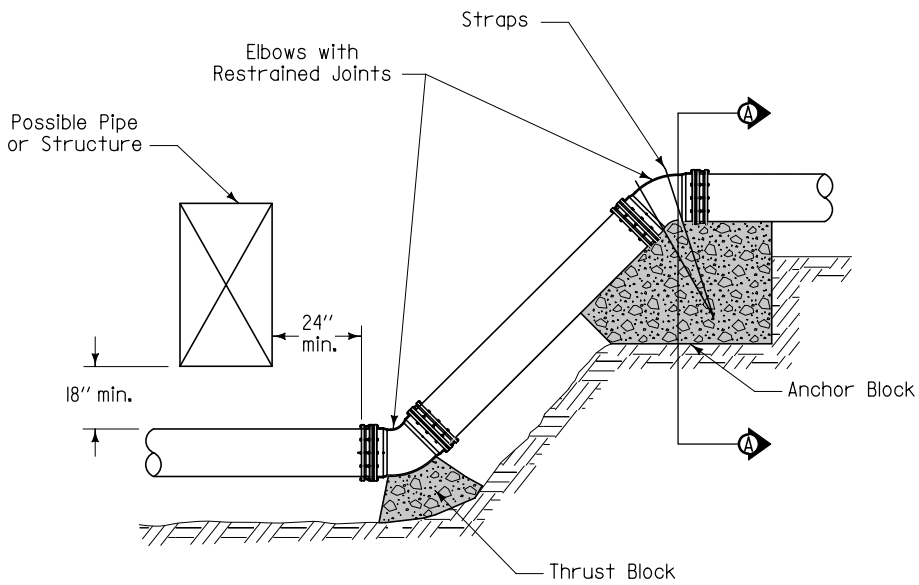

ELEVATION

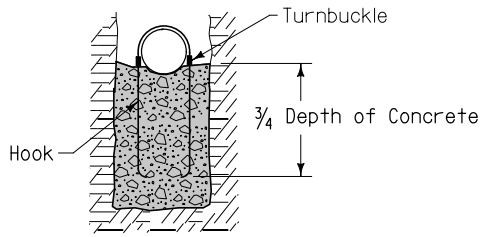

SECTION A-A

DEAD ENDS (ALTERNATE METHOD)

Use only when allowed by the Engineer, or when specified in the contract documents.

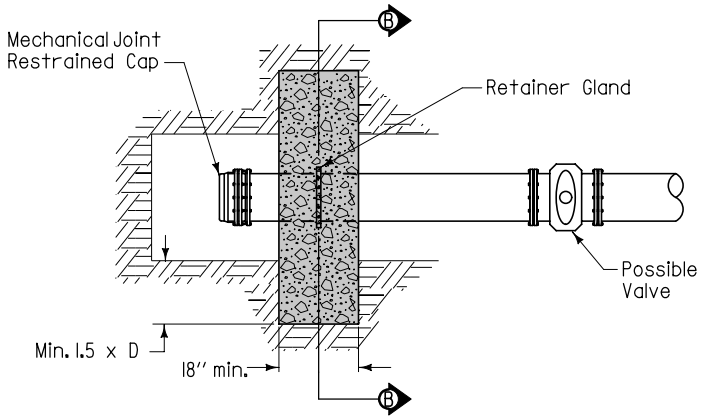

PLAN

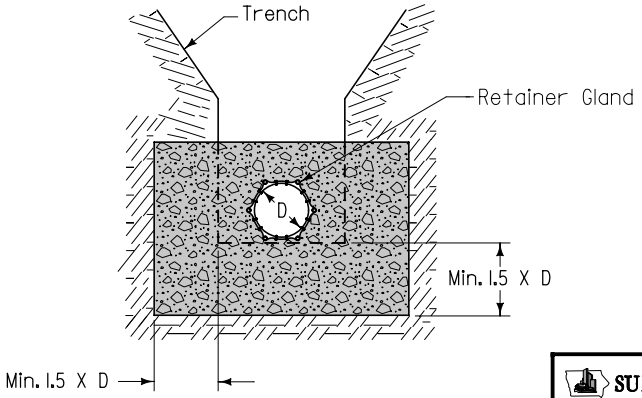

SECTION B-B

SUDAS	Iowa Department of Transportation	REVISION NEW 04-21-09
FIGURE 5010.101	STANDARD ROAD PLAN	WM-101 SHEET 2 of 2

REVISIONS: New. Replaces SUDAS Figure 5010.1.

SUDAS DIRECTOR — DESIGN METHODS ENGINEER

THRUST BLOCKS

FIGURE 5010.101 SHEET 2 OF 2