Adjacent walls may have different widths based upon pipe configuration, but structure must be rectangular.

(1) Provide two #4 hoop bars at top opening and at all pipe openings.

(2) Cast-in-place base shown. If base is precast integral with walls, the footprint of the base is not required to extend beyond the outer edge of the walls.

(3) Wall widths vary with pipe diameter and range from 4 feet minimum to 9 feet maximum. Provide 12 inches of wall width (minimum) each side of pipe opening.

(4) 12 inch minimum wall height above all pipe openings.

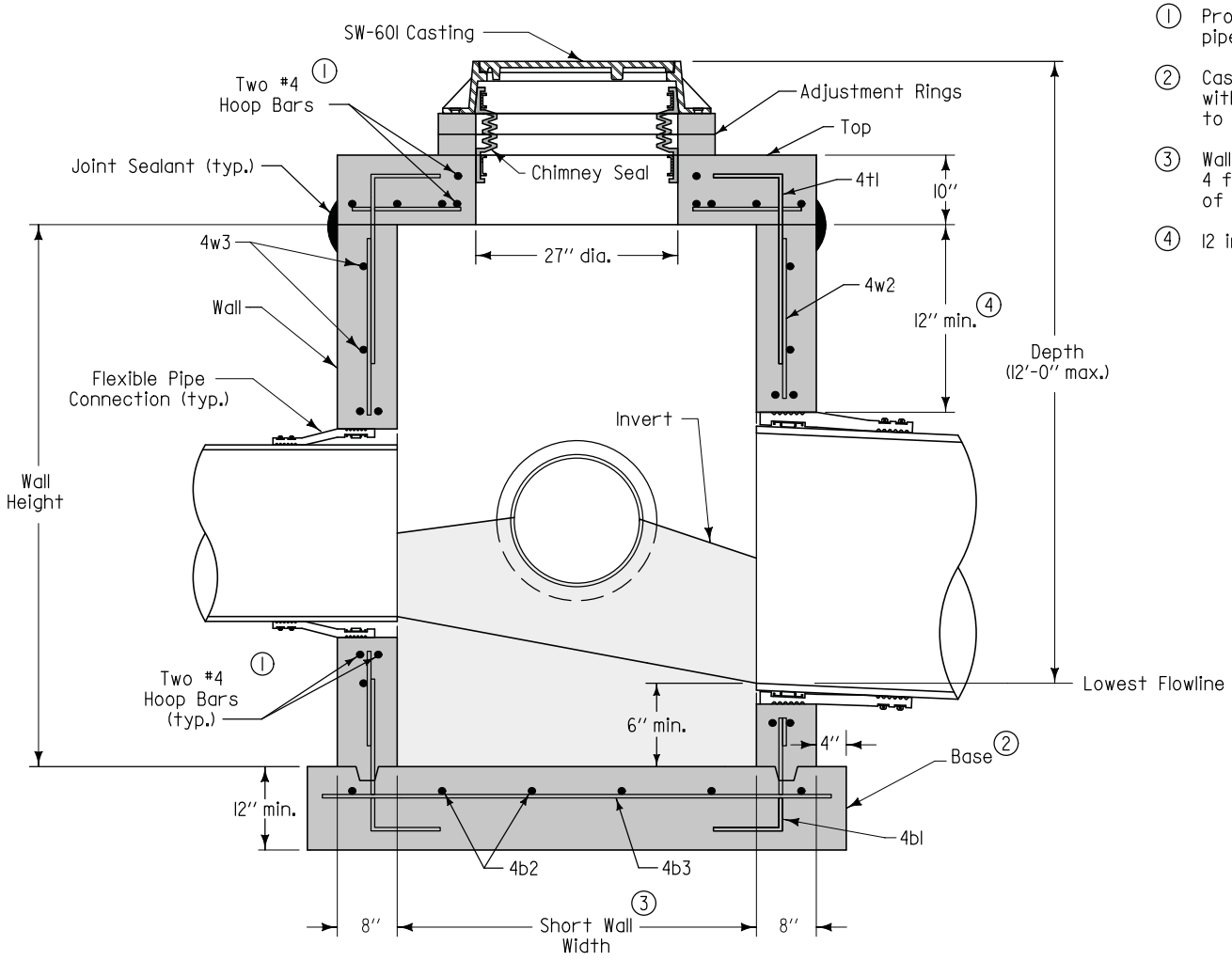

TYPICAL SECTION

SUDAS	Iowa Department of Transportation	REVISION: NEW 04-21-09
FIGURE 6010.302	STANDARD ROAD PLAN	SW-302 SHEET 1 of 2

REVISIONS: New. Replaces SUDAS Type "E" Manhole.

SUDAS DIRECTOR — DESIGN METHODS ENGINEER

RECTANGULAR SANITARY SEWER MANHOLE

FIGURE 6010.302 SHEET 1 OF 2

① Provide two #4 hoop bars at top opening and at all pipe openings.

② Cast-in-place base shown. If base is precast integral with walls, the footprint of the base is not required to extend beyond the outer edge of the walls.

③ Wall widths vary with pipe diameter and range from 4 feet minimum to 9 feet maximum. Provide 12 inches of wall width (minimum) each side of pipe opening.

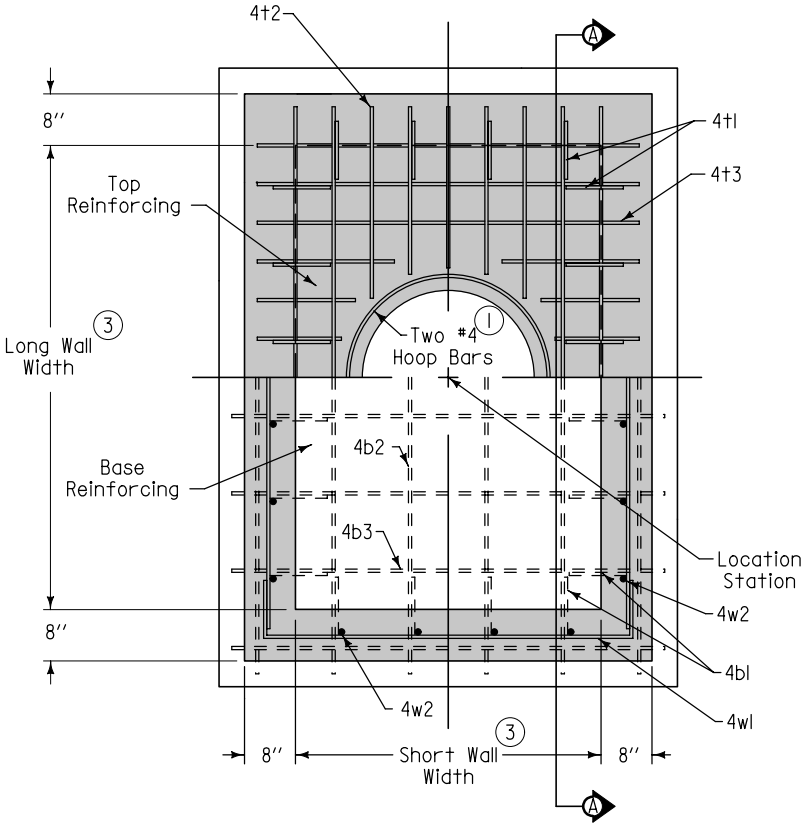

PLAN

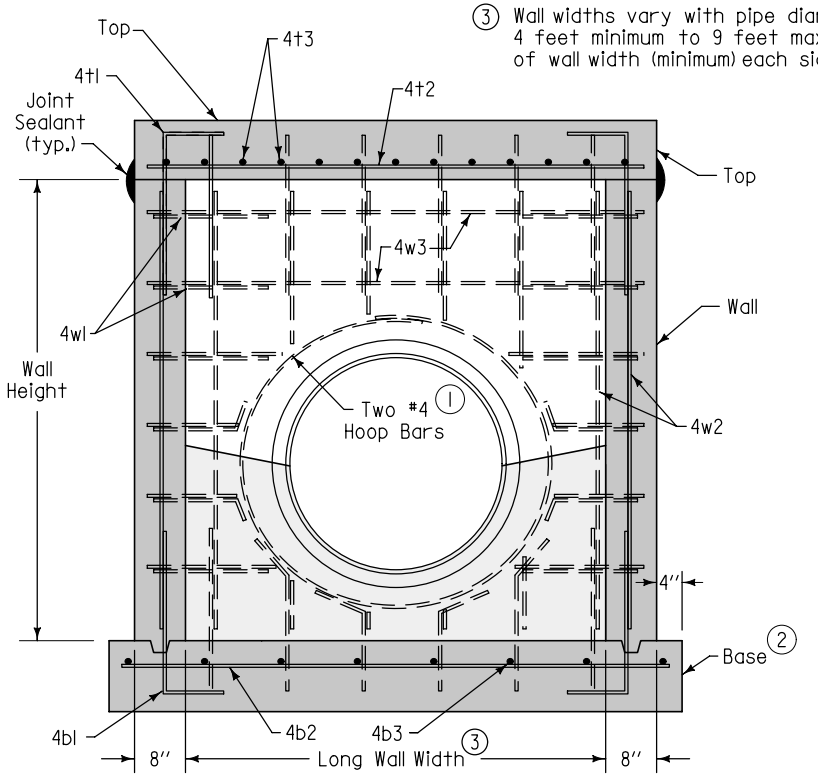

SECTION A-A

REINFORCING BAR LIST					
Mark	Size	Location	Shape	Length	Spacing
4b1	4	Base	⌋	36''	12''
4b2	4	Base	——	Long Wall plus 18''	12''
4b3	4	Base	——	Short Wall plus 18''	12''
4t1	4	Top	⌉	36''	12''
4t2	4	Top	——	Long Wall plus 12''	6''
4t3	4	Top	——	Short Wall plus 12''	6''
4w1	4	Wall	⌐⌐	Short Wall plus 48''	12''
4w2	4	Wall	——	Wall Height minus 4''	12''
4w3	4	Wall	——	Long Wall plus 12''	12''

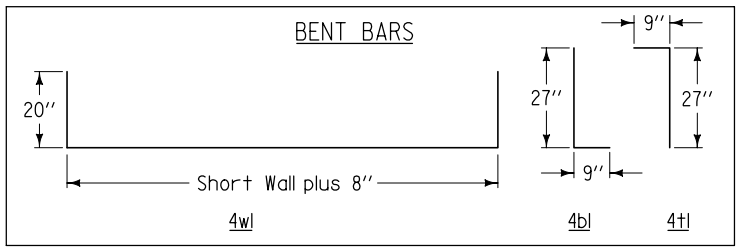

SUDAS	Iowa Department of Transportation	REVISION NEW 04-21-09
FIGURE 6010.302	STANDARD ROAD PLAN	SW-302 SHEET 2 of 2

REVISIONS: New. Replaces SUDAS Type "E" Manhole.

SUDAS DIRECTOR — Deanna Maifield, DESIGN METHODS ENGINEER

RECTANGULAR SANITARY SEWER MANHOLE

FIGURE 6010.302 SHEET 2 OF 2