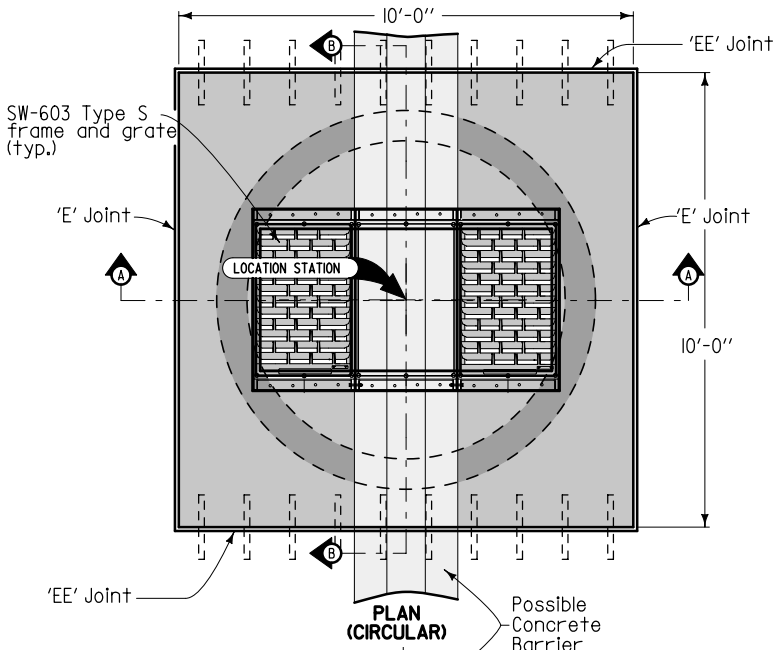

PLAN (CIRCULAR)

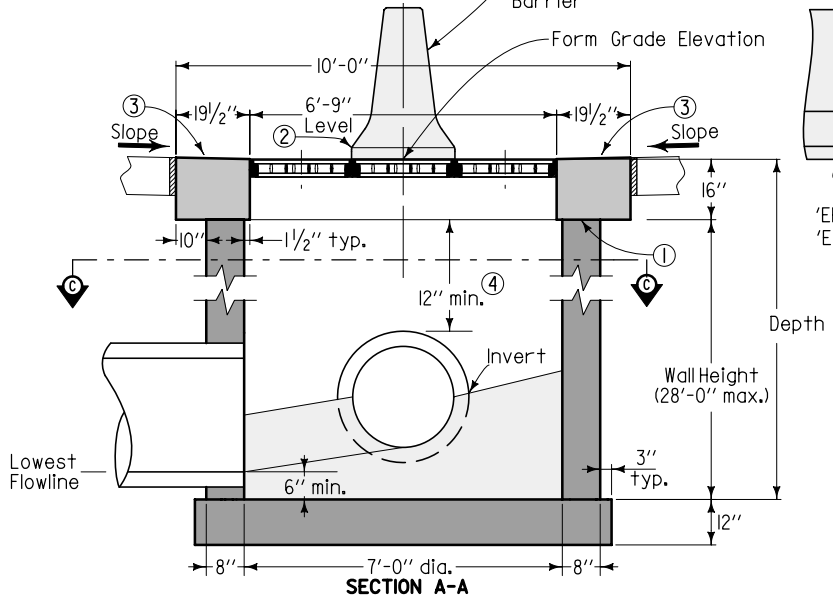

SECTION A-A (CIRCULAR OPTION)

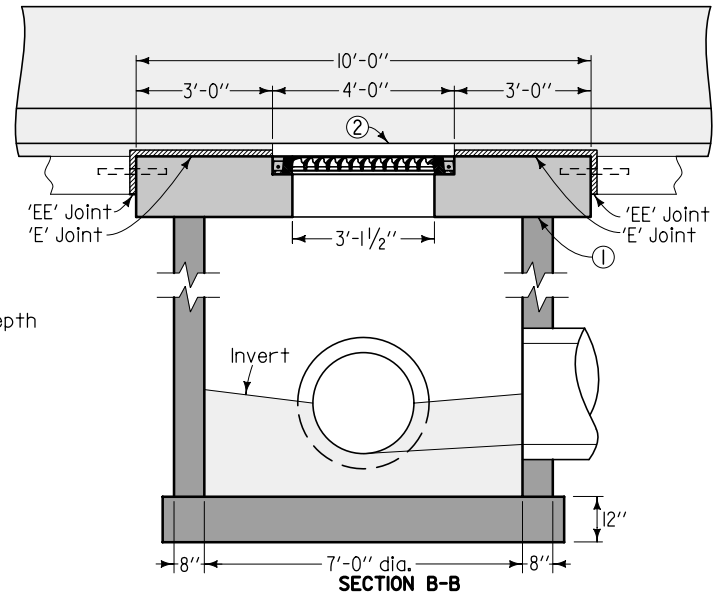

SECTION B-B (CIRCULAR OPTION)

Unless otherwise specified, the contractor may construct either a circular structure or a rectangular structure.

All plate and edge armor steel to be ASTM A 36, galvanized after fabrication.

Remove center grate before constructing concrete barrier.

Cast frames into intake top so tops of grates are ¼" below Form Grade Elevation. Bolt intake frames together on both sides with four ½" x 4" bolts.

For joint details, refer to PV-1.

1. Trowel smooth and place two layers of 30-pound roofing felt to prevent bond.
2. Leave 3-inch opening through barrier over the intake.
3. Vary slope of top to match elevation of adjacent pavement.
4. 12-inch minimum wall height above all pipes.

Possible Contract Item:

Barrier Intake, SW-547

Possible Tabulation:

104-5B

Iowa Department of Transportation

STANDARD ROAD PLAN

REVISION	
1	04-20-10

SW-547

SHEET 1 of 7

REVISIONS: Updated references to renamed standards.

Deanna Maifield

APPROVED BY DESIGN METHODS ENGINEER

TRIPLE-GRATE BARRIER INTAKE

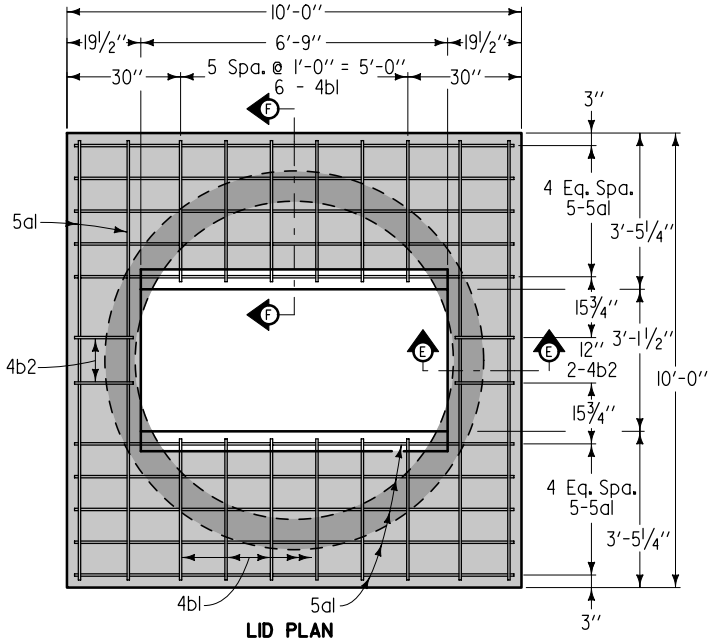

LID PLAN
(CIRCULAR OPTION)

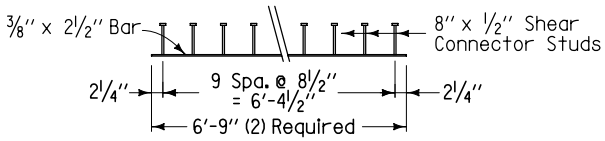

FRAME RING EDGE ARMOR

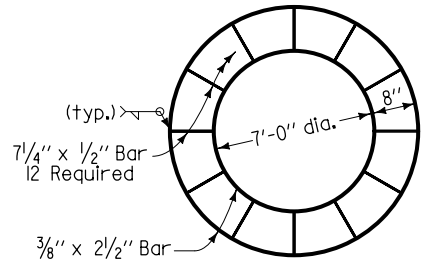

WALL EDGE ARMOR

LID REINFORCING BAR LIST - EPOXY-COATED
(CIRCULAR OPTION)

BAR	LOCATION	SHAPE	NO.	LENGTH	WEIGHT
5a1	Lid, Longit. & Transverse	—	28	9'-8	282
4b1	Lid Hoop		12	8'-3	66
4b2	Lid Hoop		4	5'-4	14
	EPOXY COATED REINFORCING STEEL - TOTAL				362

LID BENT BAR DETAILS (CIRCULAR OPTION)

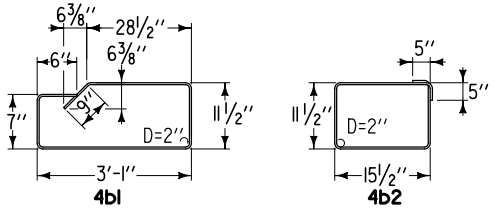

NOTE: ALL DIMENSIONS SHOWN OUT TO OUT. D = PIN DIAMETER

LID QUANTITY SUMMARY
(CIRCULAR OPTION)

Concrete	3.8	CY •
Epoxy Coated Reinforcing Steel	362	LB

• Based on Minimum thickness = 16"

Maximum Pipe Diameter for Pipes at:	
90° Separation	180° Separation
36	48

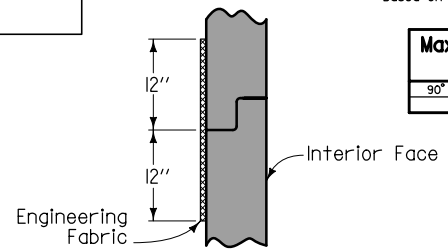

WALL JOINT DETAIL

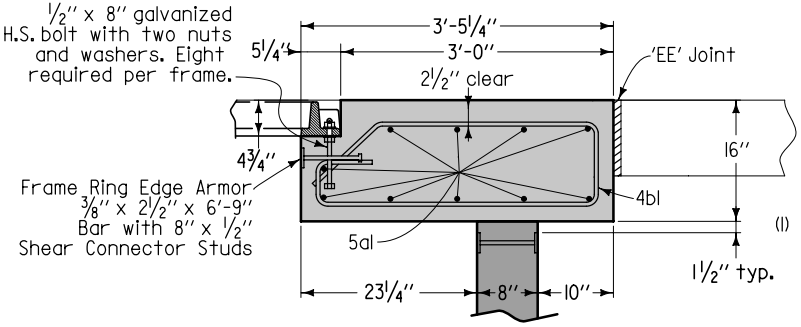

SECTION F-F

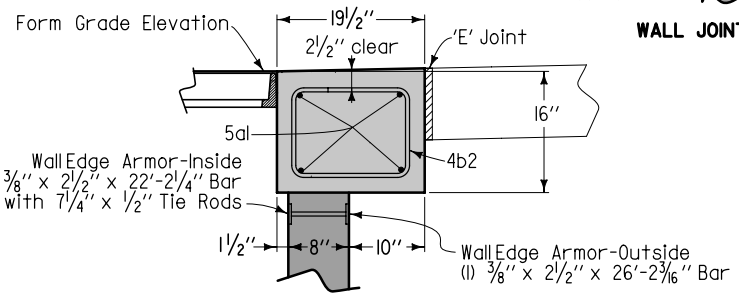

SECTION E-E

LID (CIRCULAR OPTION)

Iowa Department of Transportation

STANDARD ROAD PLAN

REVISION	
1	04-20-10

SW-547

SHEET 2 of 7

REVISIONS: Updated references to renamed standards.

Deanna Maifield
APPROVED BY DESIGN METHODS ENGINEER

TRIPLE-GRATE BARRIER INTAKE

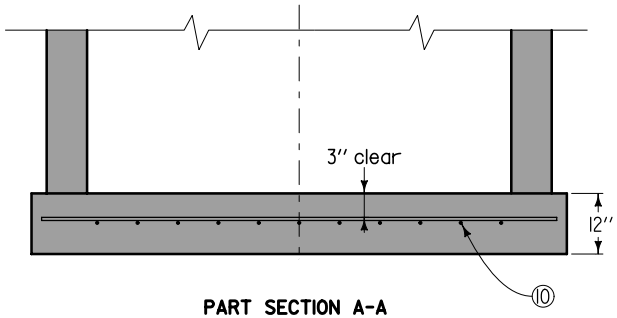

PART SECTION A-A

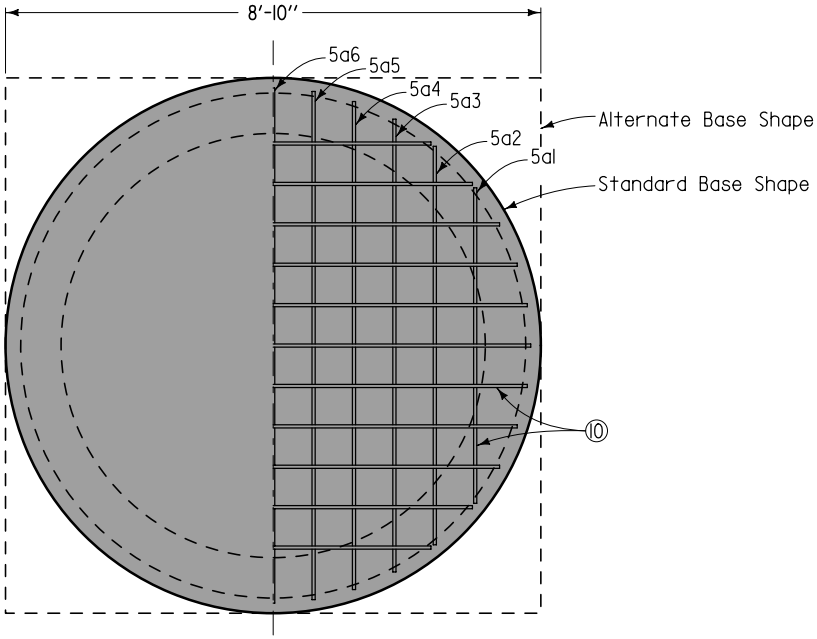

BASE PLAN
(CIRCULAR OPTION)

BASE REINFORCING BAR LIST - EPOXY-COATED (CIRCULAR OPTION)					
BAR	LOCATION	SHAPE	NO.	LENGTH	WEIGHT
5a1	Base, Longit. & Transverse	——	4	5'-3"	22
5a2	Base, Longit. & Transverse	——	4	6'-7"	27
5a3	Base, Longit. & Transverse	——	4	7'-6"	31
5a4	Base, Longit. & Transverse	——	4	8'-0"	33
5a5	Base, Longit. & Transverse	——	4	8'-4"	35
5a6	Base, Longit. & Transverse	——	2	8'-6"	18
EPOXY COATED REINFORCING STEEL - TOTAL					166

BASE QUANTITY SUMMARY (CIRCULAR OPTION)	
Concrete	2.3 CY •
Epoxy Coated Reinforcing Steel	166 LB •

• Based on Standard Base Shape

⑩ #5 at 8-inch centers each direction or equivalent welded wire fabric.

BASE (CIRCULAR OPTION)

Iowa Department of Transportation

STANDARD ROAD PLAN

REVISION	
1	04-20-10

SW-547

SHEET 3 of 7

REVISIONS: Updated references to renamed standards.

Deanna Maifield
APPROVED BY DESIGN METHODS ENGINEER

TRIPLE-GRATE BARRIER INTAKE

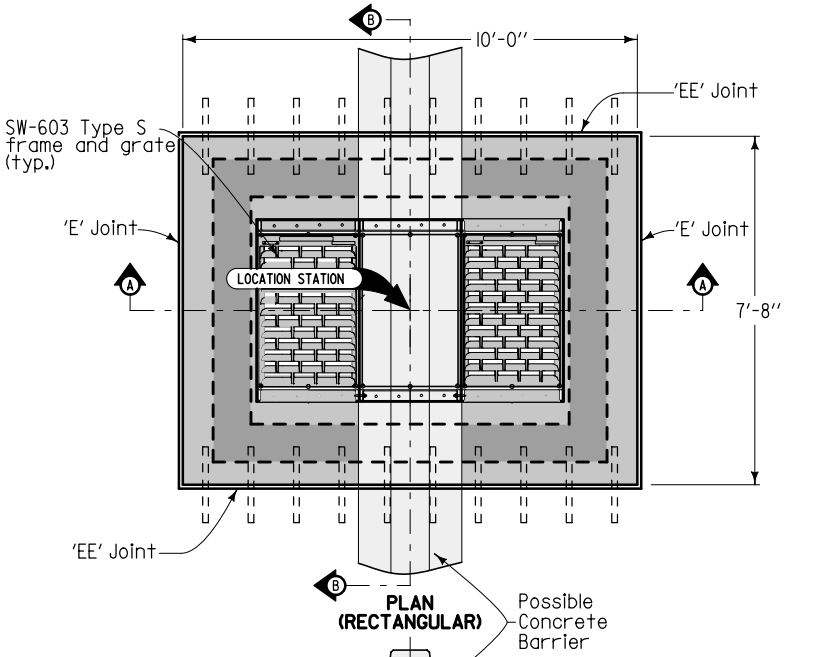

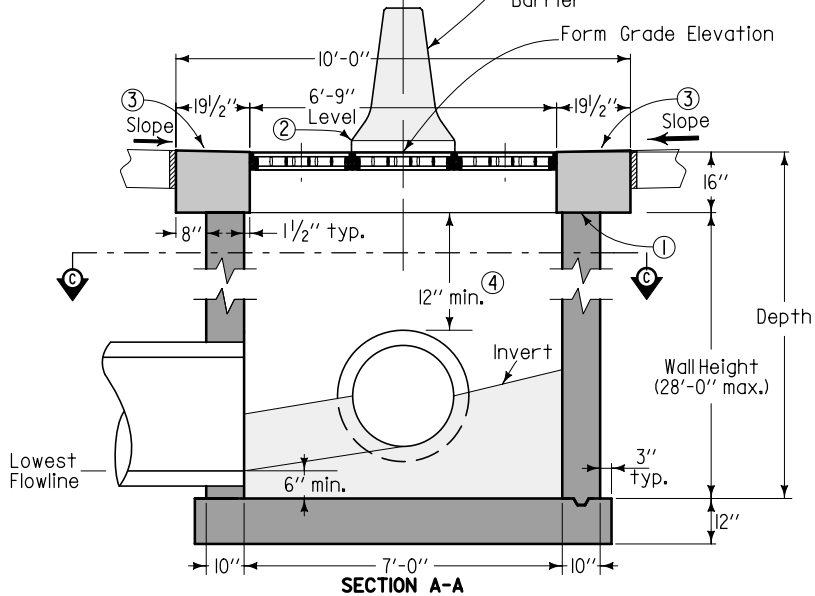

SECTION A-A
(RECTANGULAR OPTION)

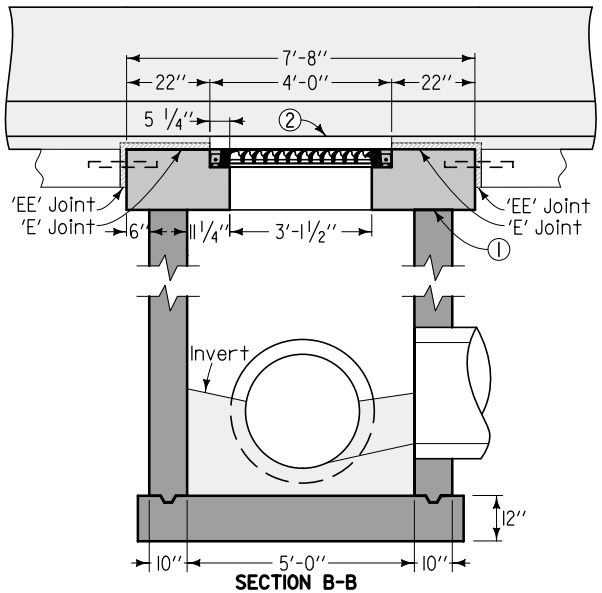

SECTION B-B
(RECTANGULAR OPTION)

① Trowel smooth and place two layers of 30-pound roofing felt to prevent bond.

② Leave 3-inch opening through barrier over the intake.

③ Vary slope of top to match elevation of adjacent pavement.

④ 12-inch minimum wall height above all pipes.

Iowa Department of Transportation

STANDARD ROAD PLAN

REVISION	
1	04-20-10

SW-547

SHEET 4 of 7

REVISIONS: Updated references to renamed standards.

Deanna Maifield
APPROVED BY DESIGN METHODS ENGINEER

TRIPLE-GRATE BARRIER INTAKE

LID REINFORCING BAR LIST - EPOXY-COATED
(RECTANGULAR OPTION)

BAR	LOCATION	SHAPE	NO.	LENGTH	WEIGHT
5a1	Lid, Longitudinal		8	10'-2	85
5a2	Lid, Transverse		10	12'-6	130
5a3	Lid, Interior, Corners		4	3'-0	13
4b1	Lid Hoop		14	5'-11	55
4b2	Lid Hoop		8	5'-4	29
	EPOXY COATED REINFORCING STEEL - TOTAL				312

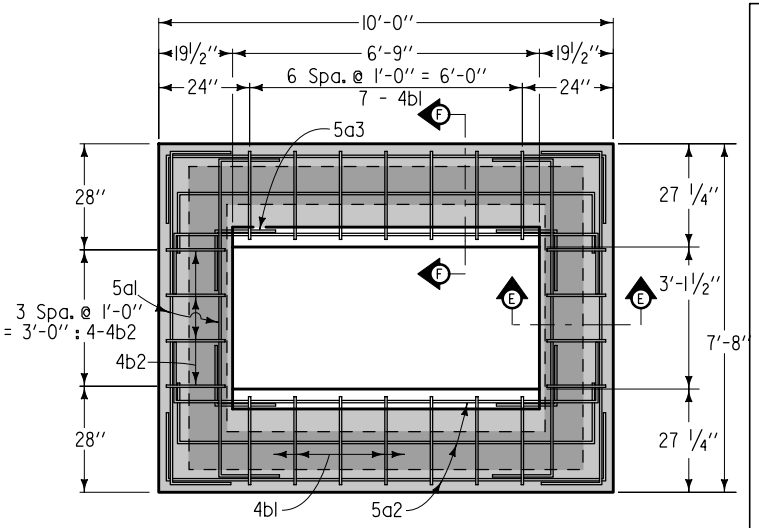

LID PLAN
(RECTANGULAR OPTION)

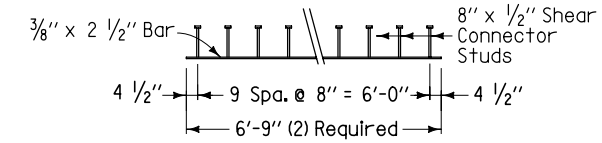

FRAME RING EDGE ARMOR

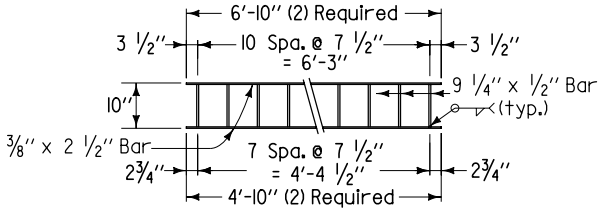

WALL EDGE ARMOR

LID BENT BAR DETAILS (RECTANGULAR OPTION)

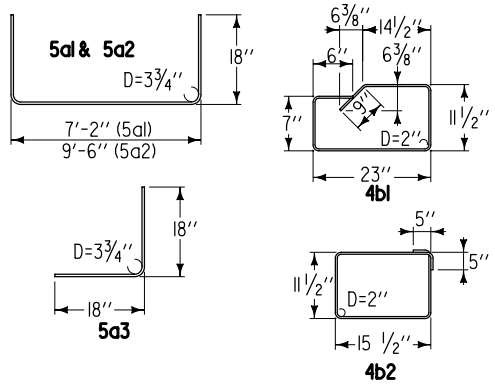

NOTE: ALL DIMENSIONS SHOWN OUT TO OUT. D = PIN DIAMETER

LID QUANTITY SUMMARY
(RECTANGULAR OPTION)

Concrete	2.7	CY
Epoxy Coated Reinforcing Steel	312	LB

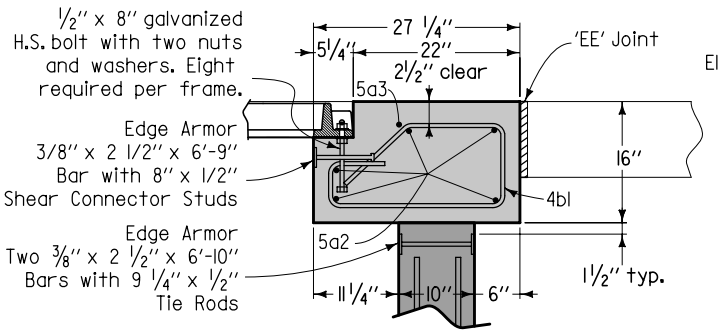

SECTION F-F

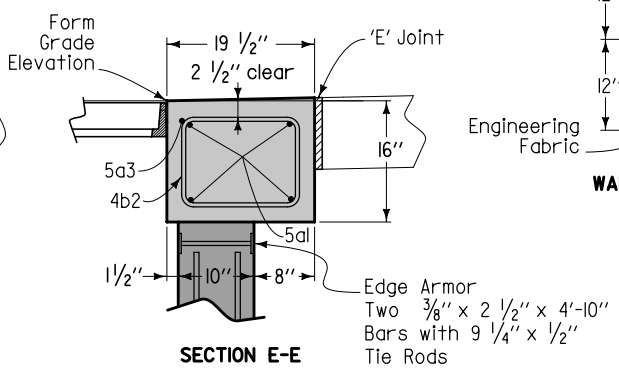

SECTION E-E

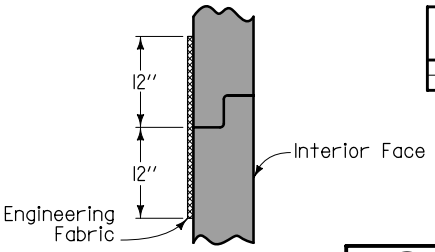

WALL JOINT DETAIL

LID (RECTANGULAR OPTION)

Iowa Department of Transportation

STANDARD ROAD PLAN

REVISION	
1	04-20-10

SW-547

SHEET 5 of 7

REVISIONS: Updated references to renamed standards.

Deanna Maifield
APPROVED BY DESIGN METHODS ENGINEER

TRIPLE-GRATE BARRIER INTAKE

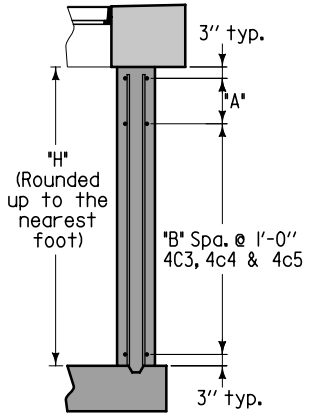

PART SECTION A-A
(Where H = 3' to 7')

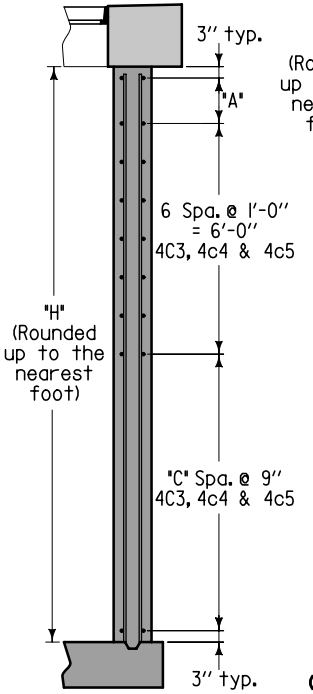

PART SECTION A-A
(Where H = 8' to 15')

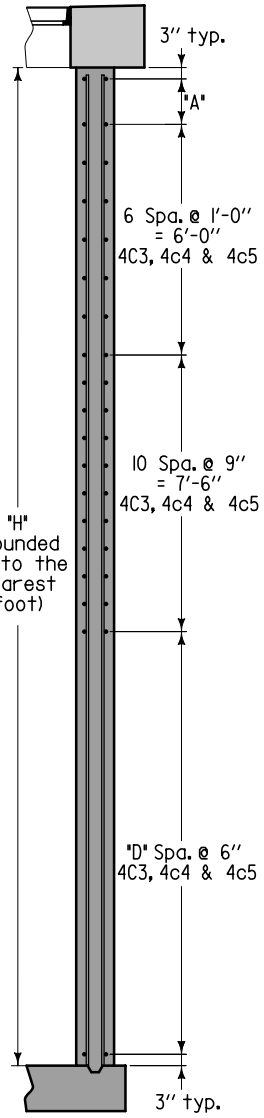

PART SECTION A-A
(Where H = 16' to 28')

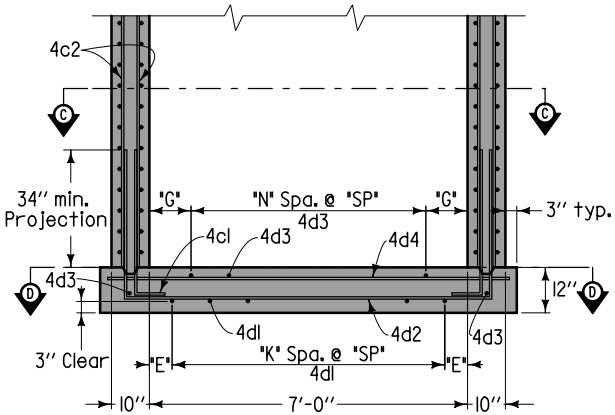

SECTION A-A

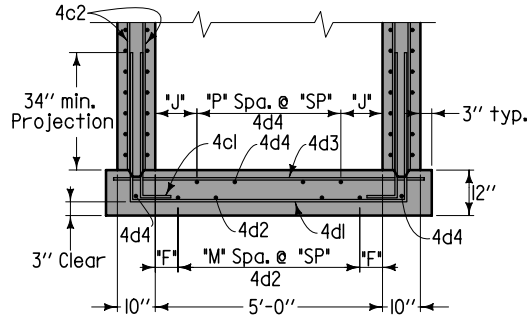

SECTION B-B

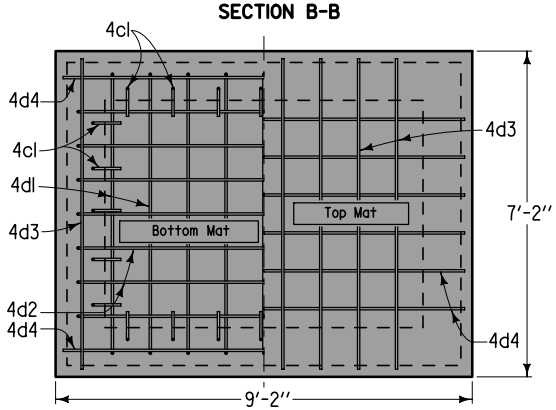

SECTION D-D
BASE REINFORCING

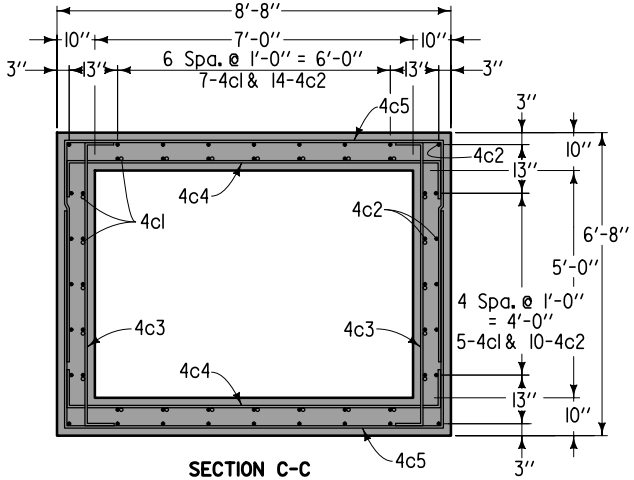

SECTION C-C

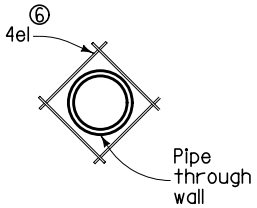

PIPE REINFORCING

⑤ Install one set of 4rl x 3'-0'' dowel bars @ 12-inch spacing at any wall joints. Twenty-eight 4rl bars required per joint, total weight = 56 lbs.

⑥ 4el bar length to be pipe diameter plus 12 inches. Place 4el bar inside of vertical reinforcing. Shift main reinforcing bars as required for pipe entrance. Field cut bars to maintain 3-inch clearance from bottom and 2-inch clearance from face of walls. Eight 4el bars required per pipe entrance.

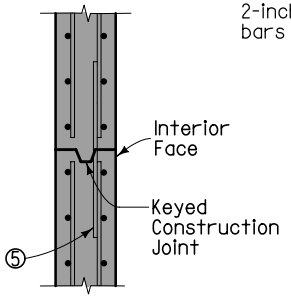

C.I.P. Wall
CONSTRUCTION JOINT

WALLS (RECTANGULAR OPTION)

Iowa Department of Transportation

STANDARD ROAD PLAN

REVISION	
1	04-20-10

SW-547

SHEET 6 of 7

REVISIONS: Updated references to renamed standards.

Deanna Maifield
APPROVED BY DESIGN METHODS ENGINEER

TRIPLE-GRATE BARRIER INTAKE

VARIABLE DIMENSIONS AND QUANTITIES FOR RECTANGULAR OPTION

Dimensions						Bar List																																	Quantities				
	⑦					4c1		4c2		4c3 ⑧				4c4 ⑧					4c5 ⑧				4d1				4d2				4d3				4d4				Concrete - Cu. Yds.				Steel
"H" (Ft.)	"A" (In.)	"E" (In.)	"F" (In.)	"G" (In.)	"J" (In.)	No.	L	No.	L	No. of Spaces "B"	"C"	"D"	NO.	L	No. of Spaces "B"	"C"	"D"	No.	L	No. of Spaces "B"	"C"	"D"	NO.	L	SP	"K"	No.	L	SP	"M"	No.	L	SP	"N"	No.	L	SP	"P"	No.	L	Base	Lid	Walls	Total	⑨ Total lbs.
3	6	2"	0"	7"	5"	24	4'-3"	--	--	2	--	--	8	7'-8"	2	--	--	8	9'-8"	2	--	--	8	17'-0"	10"	8	9	13'-5"	10"	6	7	15'-5"	10"	7	10	6'-10"	10"	5	8	8'-10"	2.4	2.7	2.5	7.7	810
4	6	2"	0"	7"	5"	24	4'-3"	52	3'-10"	3	--	--	10	7'-8"	3	--	--	10	9'-8"	3	--	--	10	17'-0"	10"	8	9	13'-5"	10"	6	7	15'-5"	10"	7	10	6'-10"	10"	5	8	8'-10"	2.4	2.7	3.4	8.5	989
5	6	2"	0"	7"	5"	24	4'-3"	52	4'-10"	4	--	--	12	7'-8"	4	--	--	12	9'-8"	4	--	--	12	17'-0"	10"	8	9	13'-5"	10"	6	7	15'-5"	10"	7	10	6'-10"	10"	5	8	8'-10"	2.4	2.7	4.2	9.4	1,068
6	6	2"	0"	7"	5"	24	4'-3"	52	5'-10"	5	--	--	14	7'-8"	5	--	--	14	9'-8"	5	--	--	14	17'-0"	10"	8	9	13'-5"	10"	6	7	15'-5"	10"	7	10	6'-10"	10"	5	8	8'-10"	2.4	2.7	5.1	10.2	1,150
7	6	2"	2"	6"	6"	24	4'-3"	52	6'-10"	6	--	--	16	7'-8"	6	--	--	16	9'-8"	6	--	--	16	17'-0"	8"	10	11	13'-5"	8"	7	8	15'-5"	8"	9	12	6'-10"	8"	6	9	8'-10"	2.4	2.7	5.9	11.0	1,273
8	9	2"	2"	6"	6"	24	4'-3"	52	7'-10"	6	1	--	18	7'-8"	6	1	--	18	9'-8"	6	1	--	18	17'-0"	8"	10	11	13'-5"	8"	7	8	15'-5"	8"	9	12	6'-10"	8"	6	9	8'-10"	2.4	2.7	6.8	11.9	1,353
9	12	2"	2"	6"	6"	24	4'-3"	52	8'-10"	6	2	--	20	7'-8"	6	2	--	20	9'-8"	6	2	--	20	17'-0"	8"	10	11	13'-5"	8"	7	8	15'-5"	8"	9	12	6'-10"	8"	6	9	8'-10"	2.4	2.7	7.6	12.7	1,434
10	6	2"	2"	6"	6"	24	4'-3"	52	9'-10"	6	4	--	24	7'-8"	6	4	--	24	9'-8"	6	4	--	24	17'-0"	8"	10	11	13'-5"	8"	7	8	15'-5"	8"	9	12	6'-10"	8"	6	9	8'-10"	2.4	2.7	8.4	13.6	1,562
11	9	2"	2"	6"	6"	24	4'-3"	52	10'-10"	6	5	--	26	7'-8"	6	5	--	26	9'-8"	6	5	--	26	17'-0"	8"	10	11	13'-5"	8"	7	8	15'-5"	8"	9	12	6'-10"	8"	6	9	8'-10"	2.4	2.7	9.3	14.4	1,641
12	12	2"	2"	6"	6"	24	4'-3"	52	11'-10"	6	6	--	28	7'-8"	6	6	--	28	9'-8"	6	6	--	28	17'-0"	8"	10	11	13'-5"	8"	7	8	15'-5"	8"	9	12	6'-10"	8"	6	9	8'-10"	2.4	2.7	10.1	15.3	1,722
13	6	2"	2"	6"	6"	24	4'-3"	52	12'-10"	6	8	--	32	7'-8"	6	8	--	32	9'-8"	6	8	--	32	17'-0"	8"	10	11	13'-5"	8"	7	8	15'-5"	8"	9	12	6'-10"	8"	6	9	8'-10"	2.4	2.7	11.0	16.1	1,849
14	9	0"	0"	3"	3"	24	4'-3"	52	13'-10"	6	9	--	34	7'-8"	6	9	--	34	9'-8"	6	9	--	34	17'-0"	6"	14	15	13'-5"	6"	10	11	15'-5"	6"	13	16	6'-10"	6"	12	15	8'-10"	2.4	2.7	11.8	17.0	2,050
15	12	0"	0"	3"	3"	24	4'-3"	52	14'-10"	6	10	--	36	7'-8"	6	10	--	36	9'-8"	6	10	--	36	17'-0"	6"	14	15	13'-5"	6"	10	11	15'-5"	6"	13	16	6'-10"	6"	12	15	8'-10"	2.4	2.7	12.7	17.8	2,129
16	12	0"	0"	3"	3"	24	4'-3"	52	15'-10"	6	10	2	40	7'-8"	6	10	2	40	9'-8"	6	10	2	40	17'-0"	6"	14	15	13'-5"	6"	10	11	15'-5"	6"	13	16	6'-10"	6"	12	15	8'-10"	2.4	2.7	13.5	18.6	2,256
17	12	0"	0"	3"	3"	24	4'-3"	52	16'-10"	6	10	4	44	7'-8"	6	10	4	44	9'-8"	6	10	4	44	17'-0"	6"	14	15	13'-5"	6"	10	11	15'-5"	6"	13	16	6'-10"	6"	12	15	8'-10"	2.4	2.7	14.4	19.5	2,383
18	12	0"	0"	3"	3"	24	4'-3"	52	17'-10"	6	10	6	48	7'-8"	6	10	6	48	9'-8"	6	10	6	48	17'-0"	6"	14	15	13'-5"	6"	10	11	15'-5"	6"	13	16	6'-10"	6"	12	15	8'-10"	2.4	2.7	15.2	20.3	2,509
19	12	0"	0"	3"	3"	24	4'-3"	52	18'-10"	6	10	8	52	7'-8"	6	10	8	52	9'-8"	6	10	8	52	17'-0"	6"	14	15	13'-5"	6"	10	11	15'-5"	6"	13	16	6'-10"	6"	12	15	8'-10"	2.4	2.7	16.0	21.2	2,636
20	12	0"	0"	3"	3"	24	4'-3"	52	19'-10"	6	10	10	56	7'-8"	6	10	10	56	9'-8"	6	10	10	56	17'-0"	6"	14	15	13'-5"	6"	10	11	15'-5"	6"	13	16	6'-10"	6"	12	15	8'-10"	2.4	2.7	16.9	22.0	2,763
21	12	0"	0"	3"	3"	24	4'-3"	52	20'-10"	6	10	12	60	7'-8"	6	10	12	60	9'-8"	6	10	12	60	17'-0"	6"	14	15	13'-5"	6"	10	11	15'-5"	6"	13	16	6'-10"	6"	12	15	8'-10"	2.4	2.7	17.7	22.9	2,888
22	12	0"	0"	3"	3"	24	4'-3"	52	21'-10"	6	10	14	64	7'-8"	6	10	14	64	9'-8"	6	10	14	64	17'-0"	6"	14	15	13'-5"	6"	10	11	15'-5"	6"	13	16	6'-10"	6"	12	15	8'-10"	2.4	2.7	18.6	23.7	3,015
23	12	0"	0"	3"	3"	24	4'-3"	52	22'-10"	6	10	16	68	7'-8"	6	10	16	68	9'-8"	6	10	16	68	17'-0"	6"	14	15	13'-5"	6"	10	11	15'-5"	6"	13	16	6'-10"	6"	12	15	8'-10"	2.4	2.7	19.4	24.6	3,141
24	12	0"	0"	3"	3"	24	4'-3"	52	23'-10"	6	10	18	72	7'-8"	6	10	18	72	9'-8"	6	10	18	72	17'-0"	6"	14	15	13'-5"	6"	10	11	15'-5"	6"	13	16	6'-10"	6"	12	15	8'-10"	2.4	2.7	20.3	25.4	3,269
25	12	0"	0"	3"	3"	24	4'-3"	52	24'-10"	6	10	20	76	7'-8"	6	10	20	76	9'-8"	6	10	20	76	17'-0"	6"	14	15	13'-5"	6"	10	11	15'-5"	6"	13	16	6'-10"	6"	12	15	8'-10"	2.4	2.7	21.1	26.3	3,395
26	12	0"	0"	3"	3"	24	4'-3"	52	25'-10"	6	10	22	80	7'-8"	6	10	22	80	9'-8"	6	10	22	80	17'-0"	6"	14	15	13'-5"	6"	10	11	15'-5"	6"	13	16	6'-10"	6"	12	15	8'-10"	2.4	2.7	22.0	27.1	3,521
27	12	0"	0"	3"	3"	24	4'-3"	52	26'-10"	6	10	24	84	7'-8"	6	10	24	84	9'-8"	6	10	24	84	17'-0"	6"	14	15	13'-5"	6"	10	11	15'-5"	6"	13	16	6'-10"	6"	12	15	8'-10"	2.4	2.7	22.8	27.9	3,647
28	12	0"	0"	3"	3"	24	4'-3"	52	27'-10"	6	10	26	88	7'-8"	6	10	26	88	9'-8"	6	10	26	88	17'-0"	6"	14	15	13'-5"	6"	10	11	15'-5"	6"	13	16	6'-10"	6"	12	15	8'-10"	2.4	2.7	23.7	28.8	3,774

⑦ A = First bar spacing at top of wall. Minimum spacing is 3 inches. Maximum spacing is 12 inches. Adjust as necessary.

⑧ See Section A-A on sheet 2 for spacing.

⑨ Quantity includes 312 lbs. for lid.

BENT BAR DETAILS (RECTANGULAR OPTION)

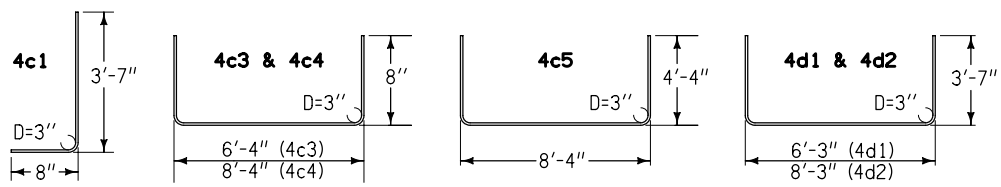

NOTE: ALL DIMENSIONS SHOWN OUT TO OUT. D = PIN DIAMETER

REINFORCEMENT (RECTANGULAR OPTION)

Iowa Department of Transportation

STANDARD ROAD PLAN

REVISION	
1	04-20-10

SW-547

SHEET 7 of 7

REVISIONS: Updated references to renamed standards.

Deanna Maifield
APPROVED BY DESIGN METHODS ENGINEER

TRIPLE-GRATE BARRIER INTAKE