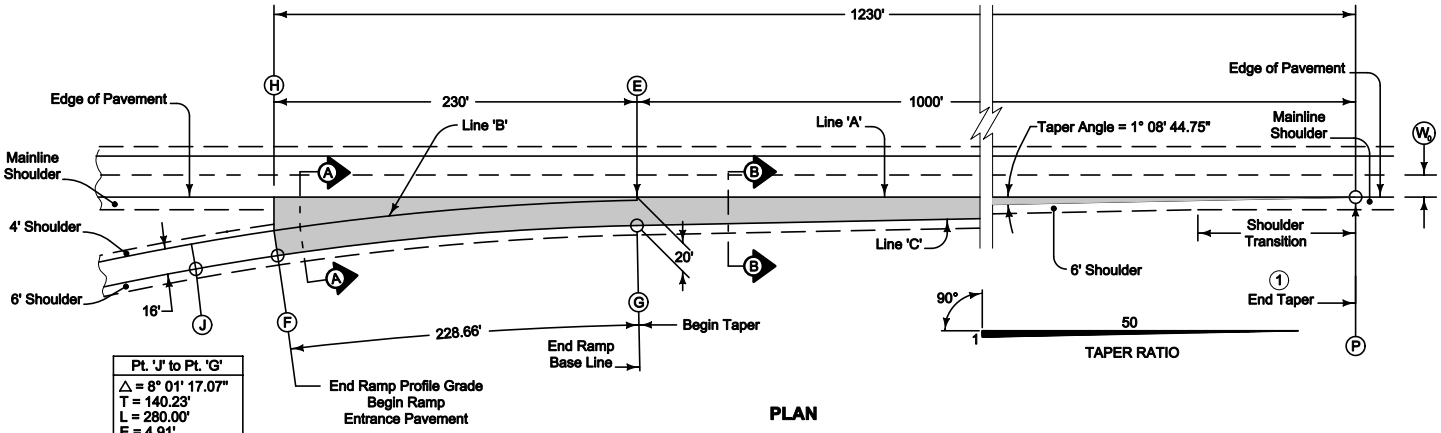

PLAN

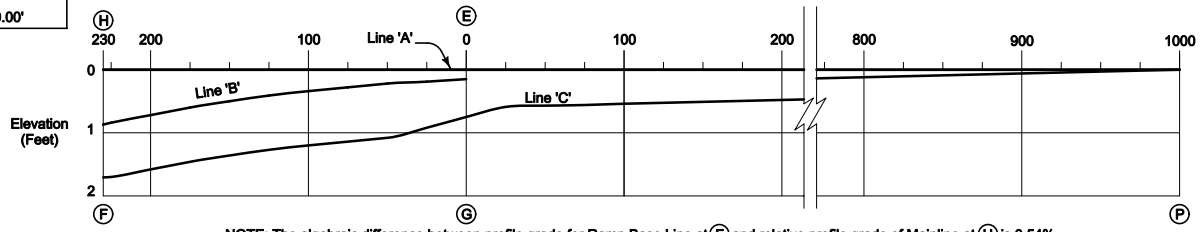

NOTE: The algebraic difference between profile grade for Ramp Base Line at (F) and relative profile grade of Mainline at (H) is 0.54%.

PROFILE

Construct ramp entrance pavement the same thickness as mainline pavement.

Ramp entrance pavement shown by shaded area is 1793 square yards.

For joint details, see PV-1

(1) For header construction details at the end of taper, see Typical 7101 or Typical 7102.

(2) Construct subbase for ramp entrance pavement the same thickness as mainline subbase.

TABLE OF OFFSETS AND DROPS FOR 16' RAMP TAPER

		(H)										(E)													
Distance From Point (E) Along Line 'A' (Ft.)		230	225	200	175	150	125	100	75	50	25	0	25	50	75	100	200	300	400	500	600	700	800	900	1000
From Line 'A' To Line 'B'	Offset (Ft.)	21.76	21.10	17.95	15.11	12.59	10.38	8.48	6.90	5.62	4.66	4.0													
	Slope (%)	← Constant 4.0% Slope →										3.78													
	Drop (Ft.)	0.87	0.84	0.72	0.60	0.50	0.42	0.34	0.28	0.22	0.19	0.15													
From Line 'B' To Line 'C'	Offset (Ft.)	← Constant 16.0' Offset →																							
	Slope (%)	5.40	5.40	5.40	5.40	5.40	5.40	5.40	5.40	5.40	4.58	3.78													
	Drop (Ft.)	0.86	0.86	0.86	0.86	0.86	0.86	0.86	0.86	0.86	0.73	0.60													
From Line 'A' To Line 'C'	Offset (Ft.)												19.5	19.0	18.5	18.0	16.0	14.0	12.0	10.0	8.0	6.0	4.0	2.0	0.0
	Slope (%)												← Constant 3.0% Slope →												
	Drop (Ft.)	1.73	1.70	1.58	1.46	1.36	1.28	1.20	1.14	1.08	0.92	0.75	0.59	0.57	0.56	0.54	0.48	0.42	0.36	0.30	0.24	0.18	0.12	0.06	0.0
Distance From Point (G) Along Line 'C' (Ft.)		228.66	223.66	198.66	173.70	148.77	123.87	99.00	74.15	49.31	24.49	0.00													
		(F)										(G)													(P)

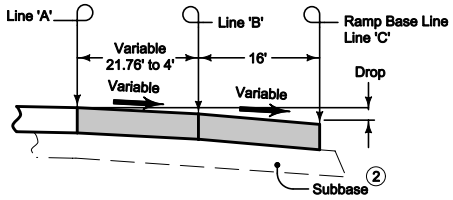

SECTION A-A

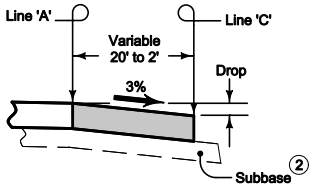

SECTION B-B

TABLE OF SHOULDER TRANSITION LENGTHS

W_o	Shoulder Width beyond Edge of Mainline Pavement		
	8'	10'	12'
12'	NA	200'	300'
14'	100'	200'	NA

NOTE: W_o is the width of the outside lane to the Edge of Pavement.

Iowa Department of Transportation

STANDARD ROAD PLAN

REVISION	
New	04-20-10

PV-411

SHEET 1 of 2

REVISIONS: New. Replaces RV-5 and RV-10. Modified length and pavement area.

Deanna Maifeld

APPROVED BY DESIGN METHODS ENGINEER

ACCELERATION TAPER FOR 16' ENTRANCE RAMP

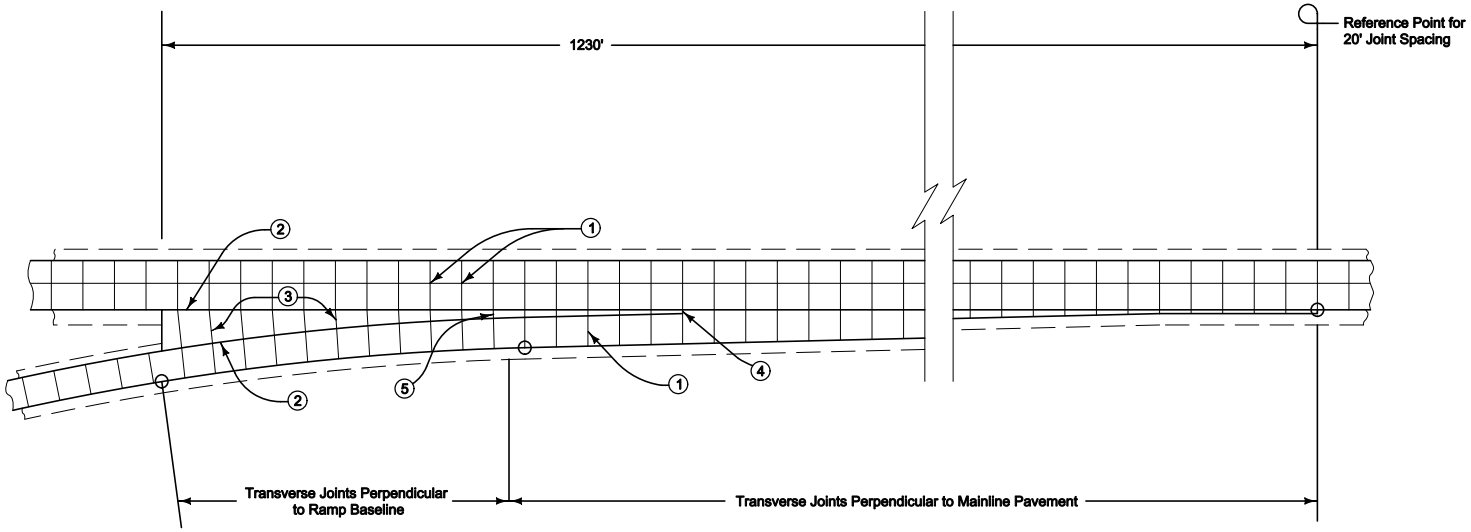

16' ENTRANCE RAMP

③ 'CD' Joints at 20' spacing.

② 'BT-2' or 'KT-2' Joint.

③ 'C' Joint.

④ 'B' Joint.

⑤ Construct transverse joints on the exit ramp taper perpendicular to the tapered edge where the gore area is greater than 4 feet.

Iowa Department of Transportation

STANDARD ROAD PLAN

REVISION	
New	04-20-10

PV-411

SHEET 2 of 2

REVISIONS: New. Replaces RV-5 and RV-10. Modified length and pavement area.

Deanna Maifeld

APPROVED BY DESIGN METHODS ENGINEER

ACCELERATION TAPER FOR 16' ENTRANCE RAMP