DESIGNER INFO

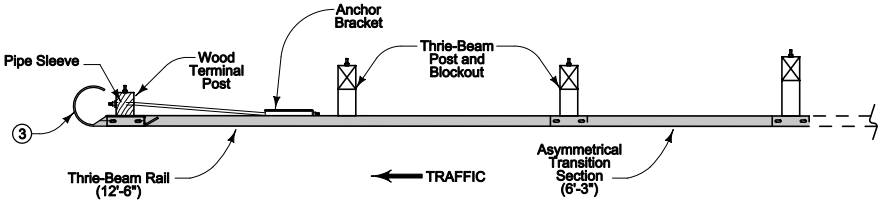

PLAN

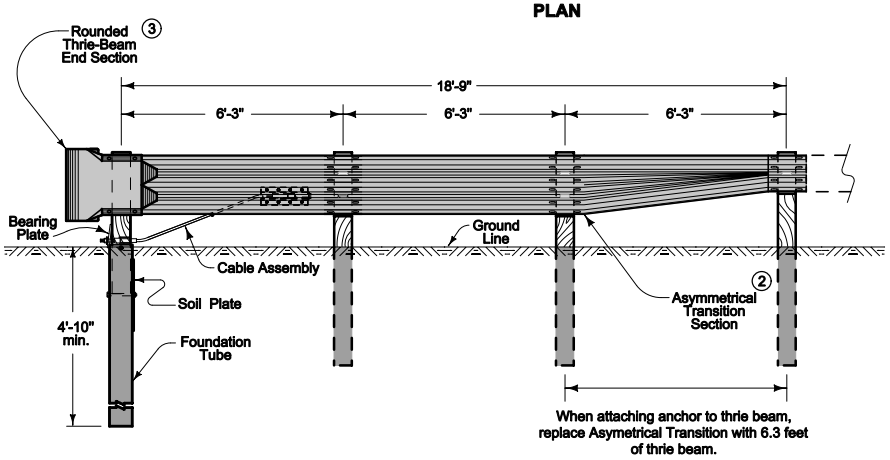

ELEVATION

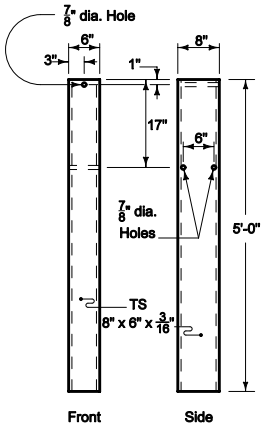

FOUNDATION TUBE

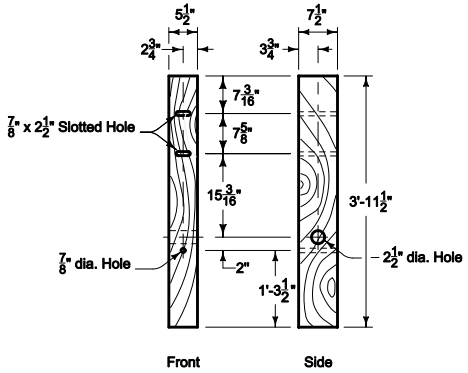

BCT WOOD POST

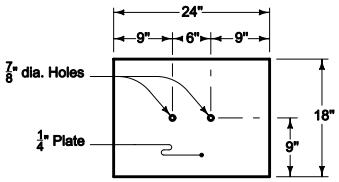

SOIL PLATE

① Slotted holes 29/32" x 1 1/8" long.

② Refer to BA-200.

③ Cover entire face of terminal section with alternating black and yellow striped adhesive sheeting. Stripes shall be approximately 3 inches in width and shall be sloped down at an angle of 45 degrees toward the side on which traffic is to pass the end anchorage. Yellow stripes shall meet the retroreflectivity requirements for Type III or Type IV reflective sheeting.

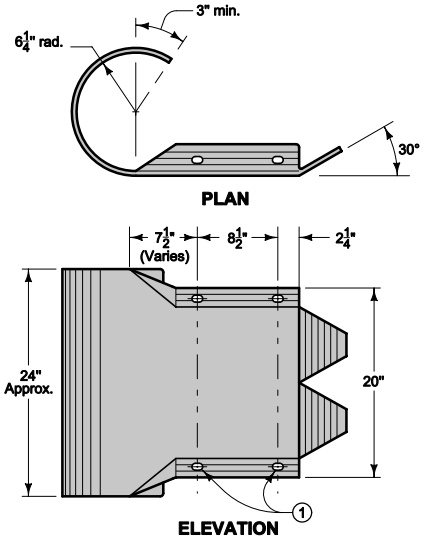

ROUNDED THRIE-BEAM END SECTION

Possible Contract Item:
Steel Beam Guardrail End Anchor, Thrie-Beam

Materials included in the Contract Item:
(1) 12'-6" Thrie-Beam rail section
Asymmetrical Transition Section
(3) 6" x 8" x 6'-0" wood posts
(1) 6" x 12" x 14 1/4" blockout
(2) 6" x 12" x 19" blockout
BCT Wood Post
Rounded Thrie-Beam End Section
Anchor Bracket Assembly
Cable Assembly
Foundation Tube Assembly with Soil Plate
Pipe Sleeve
Approved bolts, nuts, and washers

Iowa Department of Transportation

REVISION	
New	04-20-10

STANDARD ROAD PLAN

BA-204

SHEET 1 of 1

REVISIONS: New. Replaces RE-33B.

Deanna Maifield
APPROVED BY DESIGN METHODS ENGINEER

STEEL BEAM GUARDRAIL
THRIE-BEAM END ANCHOR