METRIC
Pile Driving
Data Sheet

POWER HAMMER

'WAVE EQUATION'

PROJECT NO: _____ DESIGN NO: _____

COUNTY: _____ DATE REPORTED: _____

CONTRACTOR: _____

Type of Piling	Plan Pile Length	Design Bearing	Graph No. For Official Use
1) _____	_____ m	_____ kN	_____
2) _____	_____ m	_____ kN	_____
3) _____	_____ m	_____ kN	_____

Manufacturer & Model No: _____

Unit Serial No: _____ Fuel Setting: _____

Hammer Type: _____ Blows per Min: _____ (Range)

Hammer Energy: _____ kJ Ram Rise: _____ (Range) m

Mass of RAM: _____ kg Mass of ANVIL: _____ kg

Mass of CAP: _____ kg (include insert) IDOT Id. No. _____

CUSHION #1 (for Hammer)

Surface Area: _____ sq. mm

Thickness: _____ mm

Composition: _____

CUSHION #2 (For Pile)

(Between Cap & Pile - if applicable)

Surface Area: _____ sq. mm

Thickness: _____ mm

Composition: _____

If dimensional lumber is used for cushion indicate wood grain orientation (Horizontal / Vertical)
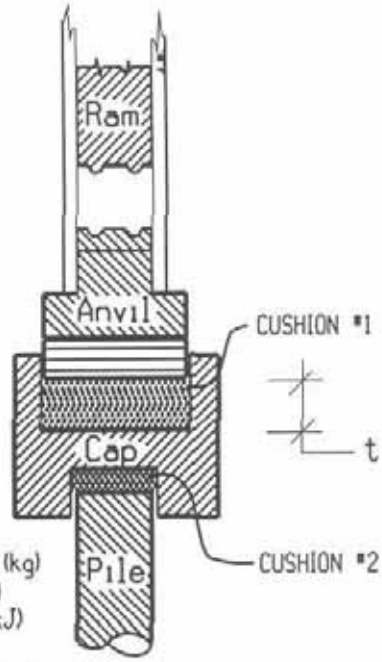
1 pound = 0.4536 kilograms (kg)
1 ton = 8.9 kilonewtons (kN)
1 ft-kip = 1.35 kilojoules (kJ)
1 ft = 0.3048 meters (m)
1 inch = 25.40 millimeters (mm)