BOSSED FOR	HOLE	FOR CONDUIT SIZE
5 THREADS	C	2"Φ RIGID STEEL
NONE	E	$\frac{1}{2}$"Φ COPPER PIPE

NOTE:
THE GROUNDING BUTTONS ARE TO BE BLIND DRILLED AND TAPPED FOR $\frac{3}{8}$"Φ x 0'-0$\frac{3}{4}$" BOLTS.

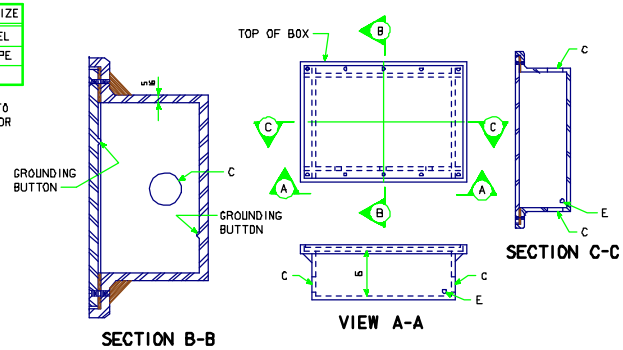

RM-37, TYPE I JUNCTION BOX

WATERTIGHT , CAST IRON - FLUSH MOUNT

LIGHTING NOTES:

SEE RM-37 STANDARD ROAD PLAN FOR ADDITIONAL INFORMATION ON JUNCTION BOXES.

CONSTRUCTION SHALL CONFORM TO THE CURRENT IOWA D.O.T. STANDARD AND SUPPLEMENTAL SPECIFICATIONS AND SPECIAL PROVISIONS.

CONDUIT INSTALLATION SHALL COMPLY WITH THE ARTICLE "ELECTRICAL DUCTS", SECTION 2523.

ALL "C" ENTRANCE HOLES IN JUNCTION BOXES SHALL BE DRILLED AND TAPPED FOR THE SPECIFIED CONDUIT SIZE. ALL OTHER HOLES SHALL HAVE A CONCRETE - TIGHT SLIP FIT. CONDUIT ENDS SHALL NOT PROTRUDE INTO JUNCTION BOX MORE THAN $\frac{1}{4}$". DRAIN PIPE END SHALL BE FLUSH WITH INSIDE SURFACE OF BOX. GROUNDING BUTTONS SHALL BE LOCATED APPROXIMATELY 3" FROM THE INSIDE SURFACE OF THE BOX WALL, AND NOT CLOSER THAN 3" TO THE EDGE OF ANY HOLE IN THE BOX FLOOR. HOLES FOR DRAIN PIPE SHALL BE PLACED IN THE LOW CORNER OF THE BOX, WITH A MINIMUM CLEARANCE OF 1" BETWEEN THE EDGE OF THE HOLE AND THE INSIDE SURFACE OF THE BOX WALL. TYPICAL DETAILS ARE SHOWN ON THIS SHEET.

THE RIGID STEEL CONDUIT, JUNCTION BOXES AND FITTINGS INCLUDING LABOR AND ANY ADDITIONAL WORK TO DO THE INSTALLATION IS CONSIDERED INCIDENTAL TO THE COST OF THE RAILING.

SEE ESTIMATED REFERENCE INFORMATION FOR CONCRETE BRIDGE RAILING TO DETERMINE WHICH RAIL CONTAINS THE CONDUIT.

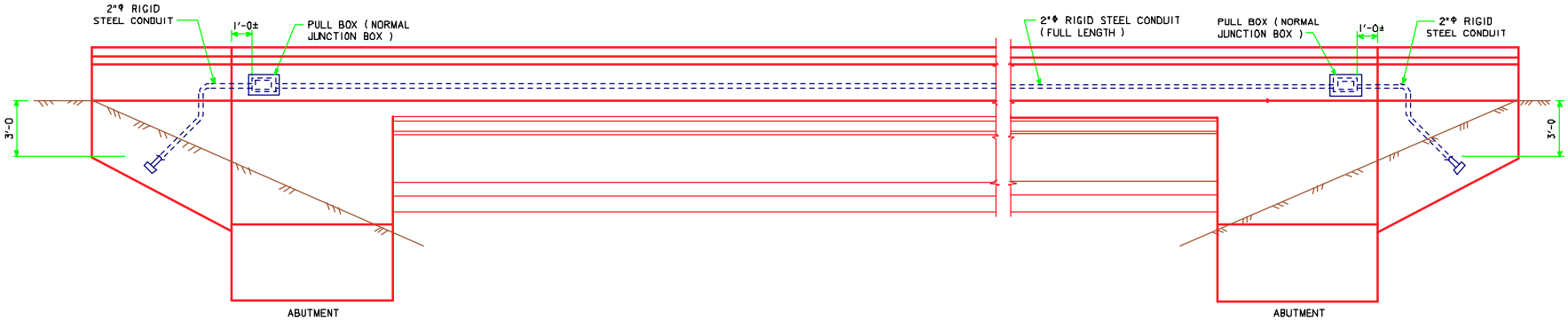

EXTERIOR ELEVATION

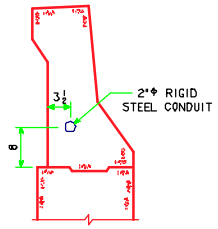

SECTION THRU BARRIER RAIL

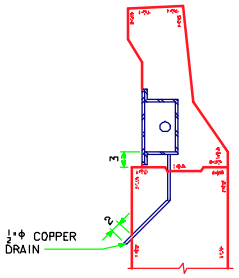

SECTION THRU JUNCTION BOX

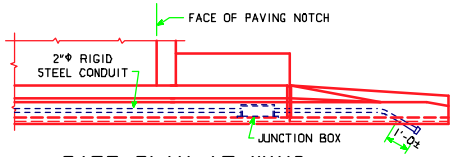

PART PLAN AT WING

LATEST REVISION DATE

APPROVED BY BRIDGE ENGINEER

Iowa Department of Transportation
Highway Division

STANDARD DESIGN - 40' ROADWAY, 2 SPAN BRIDGES

PRETENSIONED PRESTRESSED BULB TEE CONCRETE BEAM BRIDGES

JULY, 2004

JUNCTION BOX AND CONDUIT DETAILS

BT40-CD1-04