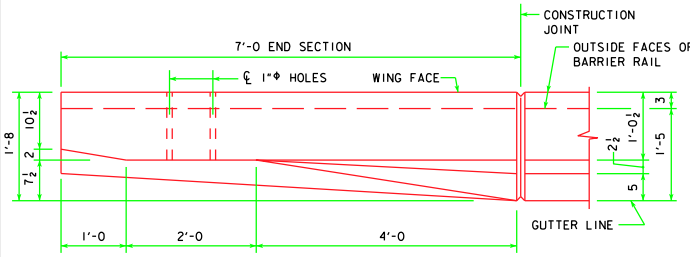

PART PLAN VIEW

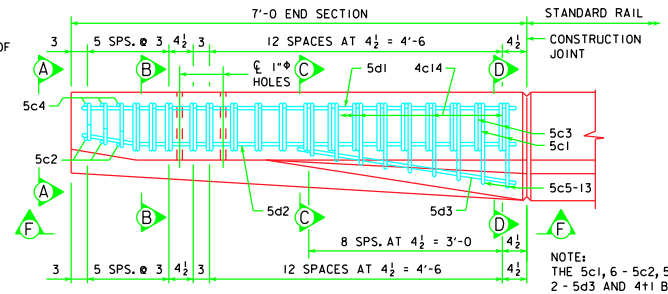

PART VIEW E-E

NOTE:
THE 5c1, 6 - 5c2, 5c5-13, 2 - 5d2, 2 - 5d3 AND 4t1 BARS ARE TO BE PLACED WITH THE ABUTMENT WING FOOTING. THE DETAILS FOR PLACEMENT ARE SHOWN ON THE STANDARD ABUTMENT SHEET.

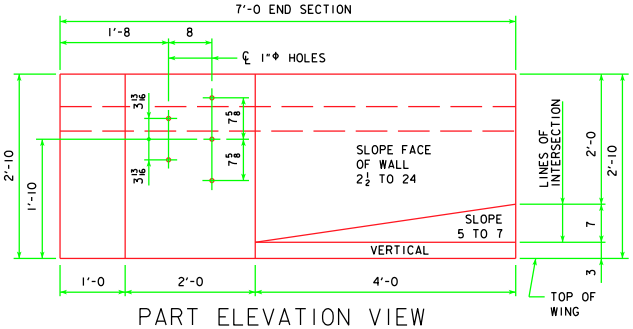

PART ELEVATION VIEW

PROVIDE 5 HOLES FORMED WITH 1"Φ PLASTIC CONDUIT. COST TO BE INCLUDED IN PRICE BID FOR CONCRETE BARRIER RAILING.

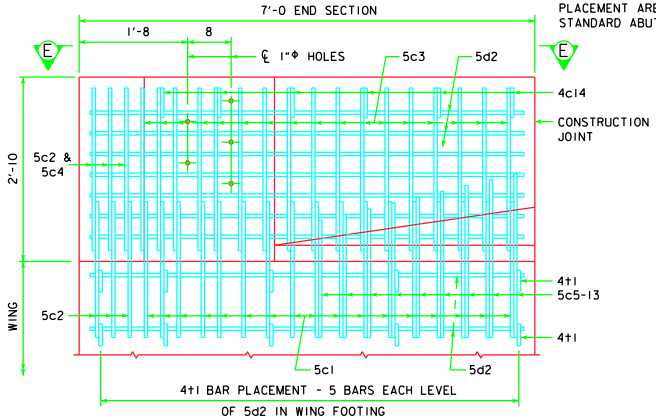

PART VIEW F-F

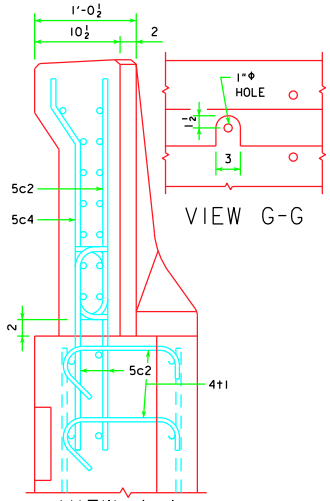

VIEW A-A

VIEW G-G

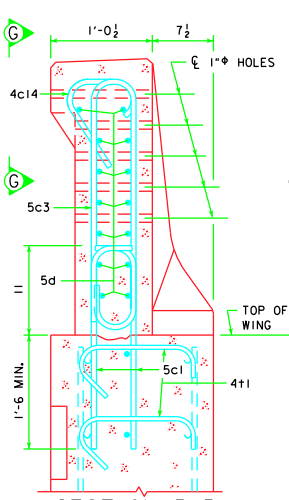

SECTION B-B

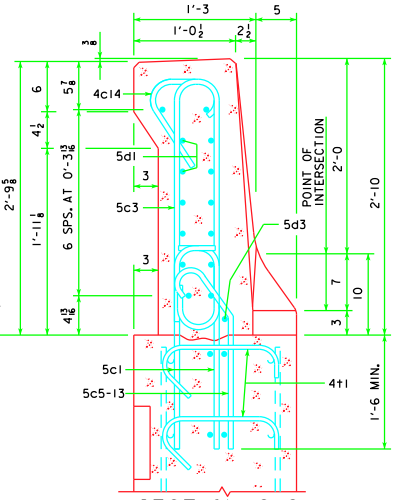

SECTION C-C

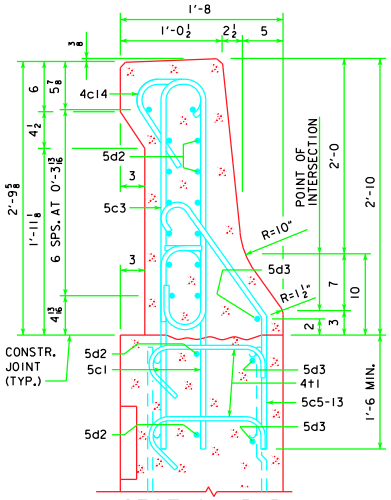

SECTION D-D

EPOXY REINFORCING STEEL - ONE END SECTION

BAR	LOCATION	SHAPE	NO.	LENGTH	WEIGHT
5c1	VERTICAL, RAIL TO WING FOOTING		34	2'-10	100
5c2	VERTICAL AT NOSE, RAIL TO WING FOOTING		9	2'-10	27
5c3	VERTICAL		17	6'-1	108
5c4	VERTICAL AT NOSE		3	2'-11	9
5c5-13	VERTICAL		9	VARIES	35
4c14	VERTICAL		6	2'-6	10
5d1	HORIZONTAL		7	6'-8	49
5d2	HORIZONTAL		9	6'-9	63
5d3	HORIZONTAL		3	3'-5	11
4t1	WING FOOTING TIE BARS		10	VARIES	13
(INCLUDE WITH BARRIER RAIL REINFORCING)		TOTAL WEIGHT (LBS.)			425

CONCRETE PLACEMENT SUMMARY

SECTION	TOTAL
BARRIER RAIL ONE END SECTION	0.66 CU. YD.

BENT BAR DETAILS

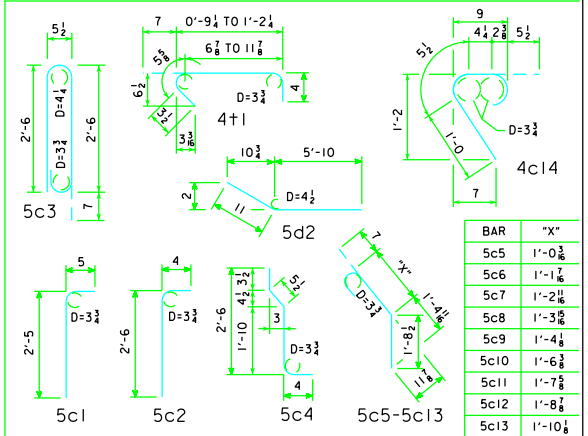

BAR	"X"
5c5	1'-0 3/16
5c6	1'-1 7/16
5c7	1'-2 11/16
5c8	1'-3 15/16
5c9	1'-4 1/8
5c10	1'-6 3/8
5c11	1'-7 5/8
5c12	1'-8 7/8
5c13	1'-10 1/8

NOTE: ALL DIMENSIONS ARE OUT TO OUT. D = PIN DIAMETER.

NOTE:
CONSTRUCTION JOINT BETWEEN TOP OF WING AND BARRIER RAIL SHALL BE ROUGHENED CONCRETE.

DASHED LINES BELOW THE TOP OF WING ARE THE ABUTMENT WING REINFORCING STEEL SEE STANDARD ABUTMENT SHEETS FOR PLACEMENT.

THE 10" RADIUS AND 1½" RADIUS ARE TYPICAL AND SHALL BE USED WHEN CONSTRUCTING THE CORNERS FOR VIEW A-A, SECTION B-B, SECTION C-C AND SECTION D-D.

FOR RUSTICATION IN WING SEE BT30-AS1-04 AND ABUTMENT AND MASKWALL DETAILS.

LATEST REVISION DATE

APPROVED BY BRIDGE ENGINEER

Iowa Department of Transportation
Highway Division

STANDARD DESIGN - 30' ROADWAY, 2 SPAN BRIDGES

PRETENSIONED PRESTRESSED BULB TEE CONCRETE BEAM BRIDGES

ALL SPANS

JULY, 2004

AESTHETIC BARRIER RAIL END SECTIONS DETAILS

BT30-BRI-04