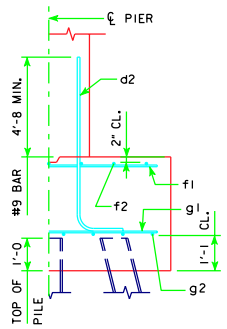

TYPICAL SECTION

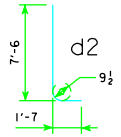

NOTE: D = PIN DIAMETER.
DIMENSIONS ARE OUT TO OUT.

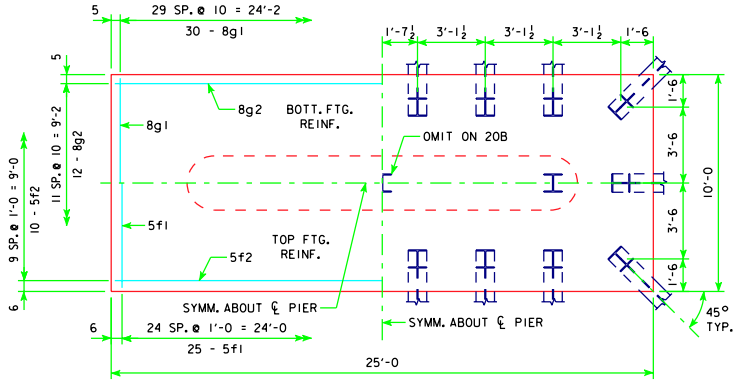

4'-0 x 10'-0 x 25'-0 FOR 20B & 21B

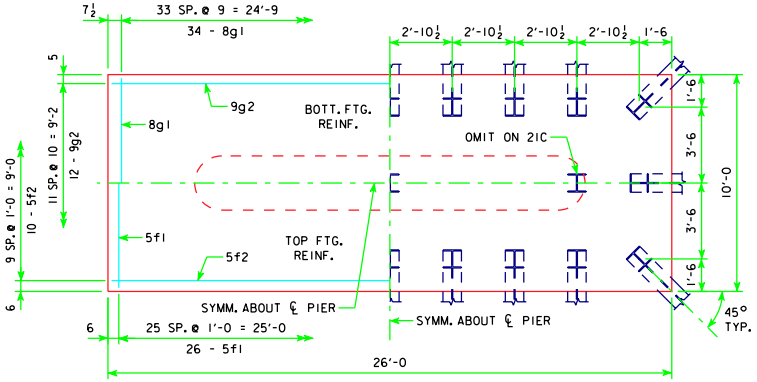

4'-0 x 10'-0 x 26'-0 FOR 21C & 23B

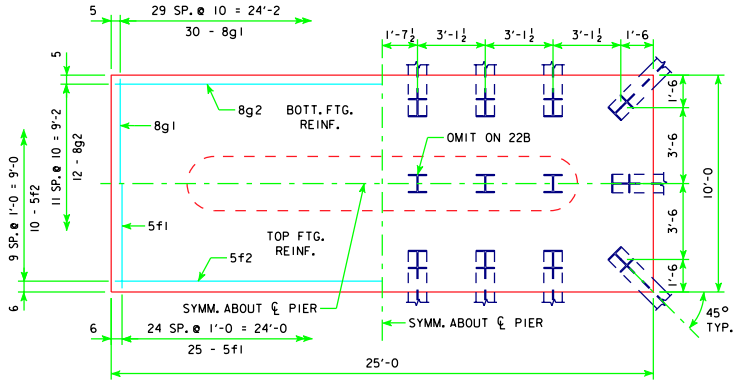

4'-0 x 10'-0 x 25'-0 FOR 22B & 24A

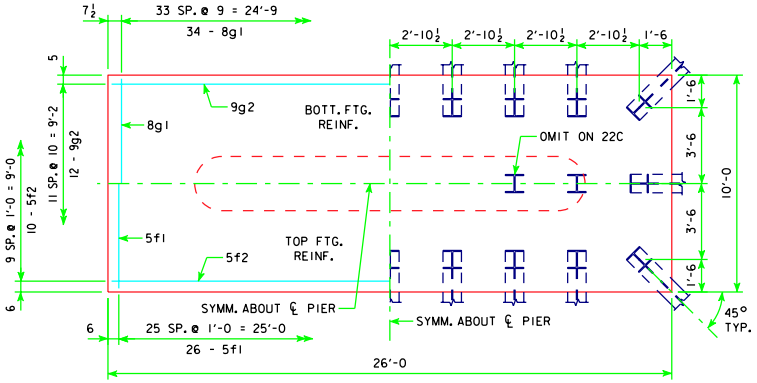

4'-0 x 10'-0 x 26'-0 FOR 22C & 24B

H IN FT.	℄ - ℄ ABUT. BRG.	PILING (HP10x57) NO. & LAYOUT	(1) DES. BRG. (TONS)	(2) LRFD DES. BRG. (KIPS)	FOOTING SIZE
25 TO 27	201'-4	20B	50	145	4' x 10' x 25'
	213'-10	21B	50	146	
	226'-4	22B	50	147	
	243'-0	24A	50	144	
28 TO 30	201'-4	21C	49	142	4' x 10' x 26'
	213'-10	21C	50	147	
	226'-4	22C	50	144	
	243'-0	24B	49	140	
31 TO 33	201'-4	21C	50	144	4' x 10' x 26'
	213'-10	22C	49	140	
	226'-4	22C	50	146	
	243'-0	24B	49	142	
34 TO 36	201'-4	21C	50	146	4' x 10' x 26'
	213'-10	22C	49	142	
	226'-4	23B	50	144	
	243'-0	24B	50	144	
37 TO 40	201'-4	22C	49	140	4' x 10' x 26'
	213'-10	22C	50	145	
	226'-4	23B	50	147	
	243'-0	24B	50	146	

FOOTING SIZE	REINFORCING STEEL (ONE FOOTING) BAR	NO., SIZE & SPACING	LENGTH	WEIGHT (LB.)	TOTAL WEIGHT (LB.)	STRUCTURAL CONCRETE (CY)
4' x 10' x 25'	d2	46 - #9 AS SHOWN	9'-1	1421	3494	37.0
	f1	25 - #5 @ 1'-0	9'-8	252		
	f2	10 - #5 @ 1'-0	24'-8	257		
	g1	30 - #8 @ 0'-10	9'-8	774		
	g2	12 - #8 @ 0'-10	24'-8	790		
4' x 10' x 26'	d2	46 - #9 AS SHOWN	9'-1	1421	3876	38.5
	f1	26 - #5 @ 1'-0	9'-8	262		
	f2	10 - #5 @ 1'-0	25'-8	268		
	g1	34 - #8 @ 0'-9	9'-8	878		
	g2	12 - #9 @ 0'-10	25'-8	1047		

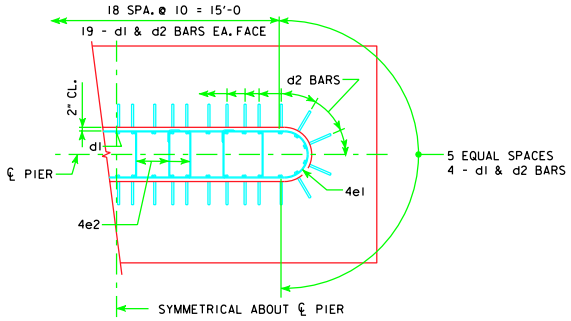

d2 BAR LAYOUT
(SEE SECTION A-A ON SHEET H40-65-06.)

(1) FOR DETERMINING ACTUAL PILE LENGTHS IN FIELD.

(2) FOR ESTIMATING PILE LENGTHS USING AASHTO LRFD SPECIFICATIONS.

FOOTING NOTES:

THESE FOOTINGS ARE DESIGNED AND DETAILED TO BE USED WITH THE CAP AND COLUMN DETAILS OF THE TEE PIERS AS SHOWN ON SHEET H40-65-06.

BATTER PILES IN EXTERIOR ROWS 1:4 IN THE DIRECTION SHOWN.

STEEL PILING USED AS POINT BEARING SHALL HAVE A MINIMUM DISTANCE OF APPROXIMATELY 10 FEET FROM BOTTOM OF FOOTING TO TOP OF BEARING ROCK. THE PILE LAYOUTS ARE SUCH THAT THE DISTANCE CENTER TO CENTER OF ADJACENT PILING SHALL NOT EXCEED 8'-0.

01-10
LATEST REVISION DATE

APPROVED BY BRIDGE ENGINEER

Iowa Department of Transportation
Highway Division

STANDARD DESIGN - 40' ROADWAY, THREE SPAN BRIDGE
PRETENSIONED PRESTRESSED CONCRETE BEAM BRIDGES
AUGUST, 2009

TEE PIER - 50 TON STEEL PILE FOOTINGS
15° SKEW - H=25' TO 40'

H40-68-06

REVISED 01-10 - ADDED FOOTING NOTES.