All hardware shall be in accordance with Article 4186.09 of the Standard Specifications.

① Refer to RD-21A for details of steel breakaway sign post.

② Type 1 delineator post cut to appropriate length. Repair cut ends per Materials I.M. 410.

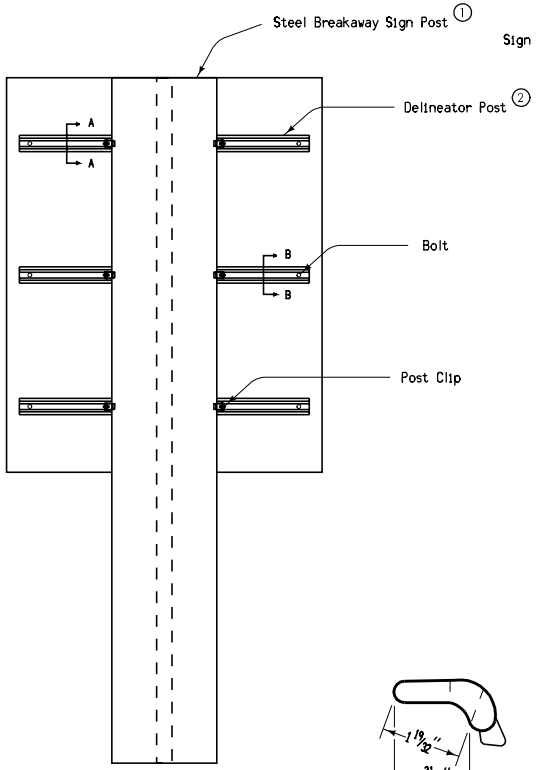

BACK VIEW

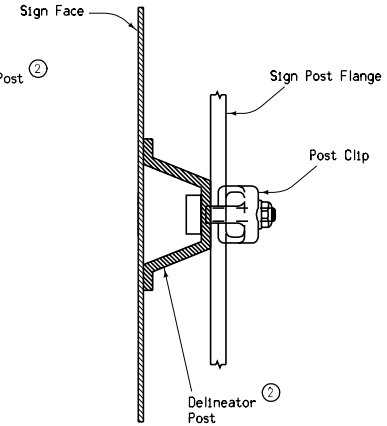

SECTION A-A

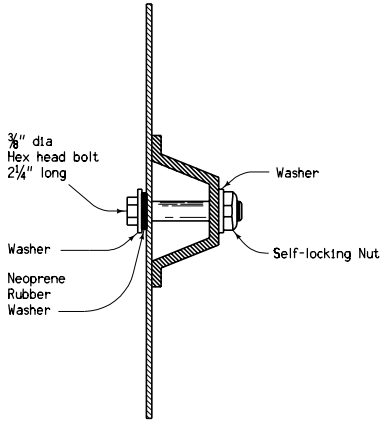

SECTION B-B

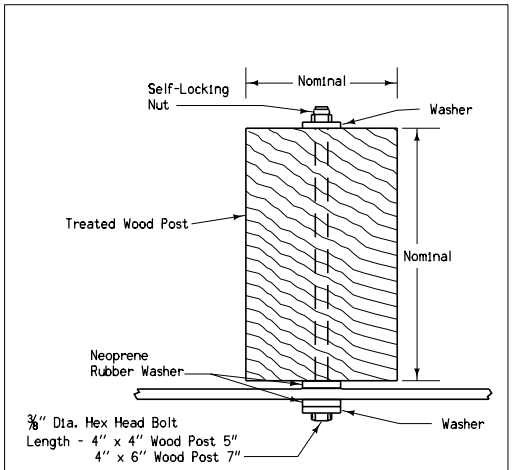

TYPICAL PLAN

WOOD POST INSTALLATION

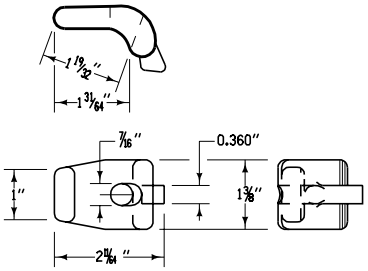

POST CLIP

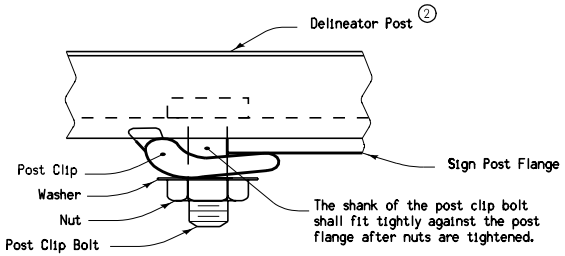

CLIP INSTALLATION

STEEL POST INSTALLATION

Contract Items:

Steel Breakaway Sign Post
Wood Sign Post

Iowa Department of Transportation

STANDARD ROAD PLAN

REVISION	
2	10-16-07

RD-33

SHEET 1 of 1

REVISIONS: Added Steel Breakaway Sign Installation details. Removed Post information.

Deanna Maifeld
APPROVED BY DESIGN METHODS ENGINEER

INSTALLATION DETAILS FOR TYPE 'A' SIGNS