BILL OF REINFORCING STEEL FOR SUPERSTRUCTURE - 100' BRIDGE

LOCATION	SHAPE	BAR	0° NO.	0° LENGTH	0° WEIGHT	15° NO.	15° LENGTH	15° WEIGHT	30° NO.	30° LENGTH	30° WEIGHT	45° NO.	45° LENGTH	45° WEIGHT
SLAB LONGITUDINAL BOTTOM		8a1	53	23'-4	3302	53	23'-4	3302	53	23'-4	3302	53	23'-4	3302
SLAB LONGITUDINAL BOTTOM		8a2	53	33'-6	4741	53	33'-6	4741	53	33'-6	4741	53	33'-6	4741
SLAB LONGITUDINAL BOTTOM		8a3	53	31'-6	4458	53	31'-6	4458	53	31'-6	4458	53	31'-6	4458
SLAB LONGITUDINAL BOTTOM		9a4	52	29'-10	5275	52	29'-10	5275	52	29'-10	5275	52	29'-10	5275
SLAB LONGITUDINAL BOTTOM		9a5	26	32'-0	2829	26	32'-0	2829	26	32'-0	2829	26	32'-0	2829
SLAB LONGITUDINAL BOTTOM, AT RAIL		8a6	8	36'-10	787	8	36'-10	787	8	36'-10	787	8	36'-10	787
SLAB LONGITUDINAL BOTTOM, AT RAIL		8a7	4	37'-4	399	4	37'-4	399	4	37'-4	399	4	37'-4	399
SLAB LONGITUDINAL BOTTOM, AT RAIL		8a8	8	26'-1	557	8	26'-1	557	8	26'-1	557	8	26'-1	557
SLAB LONGITUDINAL BOTTOM, AT RAIL		8a9	4	22'-6	240	4	22'-6	240	4	22'-6	240	4	22'-6	240
SLAB LONGITUDINAL TOP		6b1	53	5'-10	464	53	5'-10	464	53	5'-10	464	53	5'-10	464
SLAB LONGITUDINAL TOP		10b2	53	26'-9	6101	53	26'-9	6101	53	26'-9	6101	53	26'-9	6101
SLAB LONGITUDINAL TOP		10b3	53	27'-6	6272	53	27'-6	6272	53	27'-6	6272	53	27'-6	6272
SLAB LONGITUDINAL TOP		7b4	53	15'-4	1661	53	15'-4	1661	53	15'-4	1661	53	15'-4	1661
SLAB LONGITUDINAL TOP		6b5	52	12'-7	983	52	12'-7	983	52	12'-7	983	52	12'-7	983
SLAB LONGITUDINAL TOP		9b6	52	22'-9	4022	52	22'-9	4022	52	22'-9	4022	52	22'-9	4022
SLAB LONGITUDINAL TOP		6b7	26	26'-10	1048	26	26'-10	1048	26	26'-10	1048	26	26'-10	1048
SLAB LONGITUDINAL TOP, AT RAIL		6b8	8	24'-4	292	8	24'-4	292	8	24'-4	292	8	24'-4	292
SLAB LONGITUDINAL TOP, AT RAIL		9b9	8	23'-6	639	8	23'-6	639	8	23'-6	639	8	23'-6	639
SLAB LONGITUDINAL TOP, AT RAIL		6b10	4	21'-0	126	4	21'-0	126	4	21'-0	126	4	21'-0	126
SLAB LONGITUDINAL TOP, AT RAIL		6b11	8	26'-4	316	8	26'-4	316	8	26'-4	316	8	26'-4	316
SLAB LONGITUDINAL TOP, AT RAIL		10b12	8	19'-0	654	8	19'-0	654	8	19'-0	654	8	19'-0	654
SLAB TRANSVERSE BOTTOM		6c1	97	23'-5	3412	97	24'-3	3533	90	23'-5	3165	82	23'-5	2884
SLAB TRANSVERSE BOTTOM		6c2	97	21'-3	3096	97	22'-0	3205	91	21'-3	2904	84	21'-3	2681
SLAB TRANSVERSE ENDS, BOTTOM		6c3	-	-	-	-	-	-	11	VARIES	226	18	VARIES	386
SLAB TRANSVERSE ENDS, BOTTOM		6c4	-	-	-	-	-	-	10	VARIES	219	18	VARIES	363
SLAB TRANSVERSE ENDS, BOTTOM		6c5	-	-	-	-	-	-	10	VARIES	180	17	VARIES	288
SLAB TRANSVERSE ENDS, BOTTOM		6c6	-	-	-	-	-	-	10	VARIES	193	16	VARIES	319
SLAB TRANSVERSE TOP		5d1	97	23'-9	2403	97	24'-7	2487	90	23'-9	2229	82	23'-9	2031
SLAB TRANSVERSE TOP		5d2	97	21'-3	2150	97	22'-0	2226	91	21'-3	2017	84	21'-3	1862
SLAB TRANSVERSE ENDS, TOP		5d3	-	-	-	-	-	-	11	VARIES	157	18	VARIES	268
SLAB TRANSVERSE ENDS, TOP		5d4	-	-	-	-	-	-	10	VARIES	152	18	VARIES	252
SLAB TRANSVERSE ENDS, TOP		5d5	-	-	-	-	-	-	10	VARIES	125	17	VARIES	200
SLAB TRANSVERSE ENDS, TOP		5d6	-	-	-	-	-	-	10	VARIES	134	16	VARIES	222
SLAB, TRANSVERSE AT ABUTMENT		8e1	20	26'-4	1406	20	27'-1	1446	20	29'-6	1575	20	34'-8	1851
SLAB, TRANSVERSE AT ABUTMENT		8e2	20	21'-4	1139	20	22'-0	1175	20	24'-5	1304	20	29'-7	1580
SLAB, HAIRPINS, AT ABUTMENT		6e3	92	6'-10	944	92	6'-11	956	92	7'-3	1002	92	7'-11	1094
PIER CAP HOOPS		5h1	60	7'-5	464	60	7'-5	464	80	7'-5	619	100	7'-5	774
PIER CAP ENDS		8h2	4	14'-5	154	4	14'-5	154	4	14'-5	154	4	14'-5	154
PIER CAP, BOTTOM LONGITUDINAL		8h3	8	25'-5	543	8	26'-7	568	8	29'-4	627	8	35'-0	748
PIER CAP, BOTTOM LONGITUDINAL		8h4	8	19'-11	425	8	20'-3	433	8	22'-2	473	8	26'-10	573
PIER CAP, TOP LONGITUDINAL		8h5	4	26'-2	279	4	27'-5	293	4	30'-4	324	4	36'-1	385
PIER CAP, TOP LONGITUDINAL		8h6	4	21'-5	229	4	21'-10	233	4	23'-11	255	4	28'-8	306
TOP OF SLAB, TRANSVERSE, AT RAIL		5j1	192	8'-6	1702	192	8'-6	1702	186	8'-6	1649	184	8'-6	1631
WING, VERTICAL		5m1-4	32	SHOWN	117	32	SHOWN	117	32	SHOWN	117	32	SHOWN	117
WING, HORIZONTAL		5n1	24	6'-8	167	24	6'-8	167	24	6'-8	167	24	6'-8	167
PAVING SUPPORT, TRANSVERSE		5p1	40	8'-10	369	42	8'-10	387	46	8'-10	424	56	8'-10	516
PAVING SUPPORT LONGITUDINAL		5p3	6	22'-9	142	6	24'-0	150	6	26'-5	165	6	31'-9	199
PAVING SUPPORT LONGITUDINAL		5p4	6	20'-0	125	6	20'-9	130	6	23'-1	144	6	28'-3	177
SUB TOTAL - LBS.					64,432			64,992			65,867			67,194
BARRIER RAIL - SEE LIST ON RAIL SHEET J40-46-06					6153			6153			6153			6153
OPEN RAIL - SEE LIST ON RAIL SHEET J40-49-06					6371			6371			6371			6371
TOTAL - LBS. WITH MONOLITHIC PIER CAP		WITH BARRIER RAIL			70,585			71,145			72,020			73,347
		WITH OPEN RAIL			70,803			71,363			72,238			73,565
TOTAL - LBS. WITH NON-MONOLITHIC PIER CAP		WITH BARRIER RAIL			68,491			69,000			69,568			70,407
SAME AS ABOVE EXCEPT ALL "h" BARS DELETED		WITH OPEN RAIL			68,709			69,218			69,786			70,625

ESTIMATED QUANTITIES FOR SUPERSTRUCTURE - 100' BRIDGE

ITEM		SKEW	WITH MONOLITHIC PIER CAP 0°	15°	30°	45°	WITH NON-MONOLITHIC PIER CAP 0°	15°	30°	45°
WITH BARRIER RAIL	*STRUCTURAL CONCRETE (BRIDGE)	C.Y.	275.6	277.0	281.7	291.7	269.6	270.8	274.7	283.4
	REINFORCING STEEL EPOXY COATED	LBS.	70,585	71,145	72,020	73,347	68,491	69,000	69,568	70,407
CONCRETE BARRIER OR OPEN RAIL		LIN. FT.	222.0	222.2	222.9	224.5	222.0	222.2	222.9	224.5
WITH OPEN RAIL	*STRUCTURAL CONCRETE (BRIDGE)	C.Y.	275.5	276.8	281.5	291.5	269.4	270.6	274.6	283.2
	REINFORCING STEEL EPOXY COATED	LBS.	70,803	71,363	72,238	73,565	68,709	69,218	69,786	70,625

* INCLUDES 4 WINGS @ 0.71 C.Y. EACH; EXCLUDES RAIL CONCRETE.

BENT BAR DETAILS

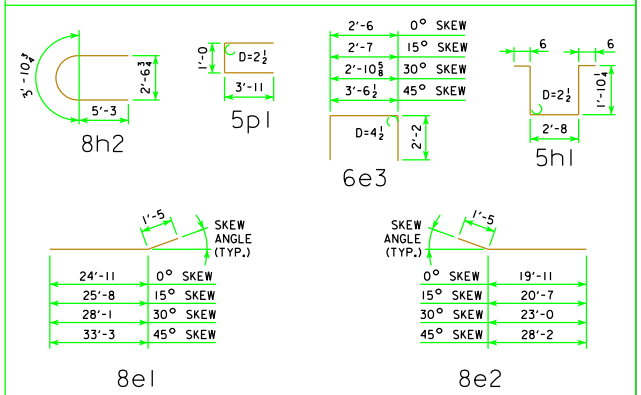

NOTE: ALL DIMENSIONS ARE OUT TO OUT. D = PIN DIAMETER.

NOTES:

ALL REINFORCING STEEL SHALL BE EPOXY COATED.

THE TRANSVERSE REBARS ARE DETAILED WITH A SPLICE LAP. AT THE CONTRACTOR'S OPTION, THIS LAP MAY BE ELIMINATED BY FURNISHING FULL LENGTH BARS WITH NO REDUCTION IN PAY WEIGHT FOR SAME.

12-07
LATEST REVISION DATE

APPROVED BY BRIDGE ENGINEER

Iowa Department of Transportation
Highway Division

STANDARD DESIGN - 40' ROADWAY, 3 SPAN BRIDGES

CONTINUOUS CONCRETE SLAB BRIDGES

NOVEMBER, 2006

SUPERSTRUCTURE DETAILS
100'-0 BRIDGE

J40-09-06

REVISED 12-07 - OPEN RAIL REINFORCING QUANTITY CHANGED