BILL OF REINFORCING STEEL FOR SUPERSTRUCTURE - 80' BRIDGE

LOCATION	SHAPE	BAR	0° NO.	0° LENGTH	0° WEIGHT	15° NO.	15° LENGTH	15° WEIGHT	30° NO.	30° LENGTH	30° WEIGHT	45° NO.	45° LENGTH	45° WEIGHT
SLAB LONGITUDINAL BOTTOM		8a1	53	19'-4	2736	53	19'-4	2736	53	19'-4	2736	53	19'-4	2736
SLAB LONGITUDINAL BOTTOM		8a2	53	27'-0	3821	53	27'-0	3821	53	27'-0	3821	53	27'-0	3821
SLAB LONGITUDINAL BOTTOM		8a3	53	29'-1	4116	53	29'-1	4116	53	29'-1	4116	53	29'-1	4116
SLAB LONGITUDINAL BOTTOM		7a4	52	24'-1	2560	52	24'-1	2560	52	24'-1	2560	52	24'-1	2560
SLAB LONGITUDINAL BOTTOM		7a5	26	24'-6	1302	26	24'-6	1302	26	24'-6	1302	26	24'-6	1302
SLAB LONGITUDINAL BOTTOM, AT RAIL		7a6	8	29'-10	488	8	29'-10	488	8	29'-10	488	8	29'-10	488
SLAB LONGITUDINAL BOTTOM, AT RAIL		7a7	4	29'-4	240	4	29'-4	240	4	29'-4	240	4	29'-4	240
SLAB LONGITUDINAL BOTTOM, AT RAIL		8a8	8	21'-10	466	8	21'-10	466	8	21'-10	466	8	21'-10	466
SLAB LONGITUDINAL BOTTOM, AT RAIL		8a9	4	25'-6	272	4	25'-6	272	4	25'-6	272	4	25'-6	272
SLAB LONGITUDINAL TOP		6b1	53	18'-4	1459	53	18'-4	1459	53	18'-4	1459	53	18'-4	1459
SLAB LONGITUDINAL TOP		9b2	53	21'-9	3919	53	21'-9	3919	53	21'-9	3919	53	21'-9	3919
SLAB LONGITUDINAL TOP		9b3	53	30'-10	5556	53	30'-10	5556	53	30'-10	5556	53	30'-10	5556
SLAB LONGITUDINAL TOP		6b4	52	6'-4	495	52	6'-4	495	52	6'-4	495	52	6'-4	495
SLAB LONGITUDINAL TOP		8b5	52	21'-3	2950	52	21'-3	2950	52	21'-3	2950	52	21'-3	2950
SLAB LONGITUDINAL TOP		6b6	26	16'-4	638	26	16'-4	638	26	16'-4	638	26	16'-4	638
SLAB LONGITUDINAL TOP, AT RAIL		6b8	8	24'-4	292	8	24'-4	292	8	24'-4	292	8	24'-4	292
SLAB LONGITUDINAL TOP, AT RAIL		9b9	8	23'-6	639	8	23'-6	639	8	23'-6	639	8	23'-6	639
SLAB LONGITUDINAL TOP, AT RAIL		8b10	8	32'-10	701	8	32'-10	701	8	32'-10	701	8	32'-10	701
SLAB TRANSVERSE BOTTOM		6c1	77	23'-5	2708	77	24'-3	2805	70	23'-5	2462	62	23'-5	2181
SLAB TRANSVERSE BOTTOM		6c2	77	21'-3	2458	77	22'-0	2544	71	21'-3	2266	64	21'-3	2043
SLAB TRANSVERSE ENDS, BOTTOM		6c3	-	-	-	-	-	-	11	VARIES	226	18	VARIES	386
SLAB TRANSVERSE ENDS, BOTTOM		6c4	-	-	-	-	-	-	10	VARIES	219	18	VARIES	363
SLAB TRANSVERSE ENDS, BOTTOM		6c5	-	-	-	-	-	-	10	VARIES	180	17	VARIES	288
SLAB TRANSVERSE ENDS, BOTTOM		6c6	-	-	-	-	-	-	10	VARIES	193	16	VARIES	319
SLAB TRANSVERSE TOP		5d1	77	23'-9	1907	77	24'-7	1974	70	23'-9	1734	62	23'-9	1536
SLAB TRANSVERSE TOP		5d2	77	21'-3	1707	77	22'-0	1767	71	21'-3	1574	64	21'-3	1418
SLAB TRANSVERSE ENDS, TOP		5d3	-	-	-	-	-	-	11	VARIES	157	18	VARIES	268
SLAB TRANSVERSE ENDS, TOP		5d4	-	-	-	-	-	-	10	VARIES	152	18	VARIES	252
SLAB TRANSVERSE ENDS, TOP		5d5	-	-	-	-	-	-	10	VARIES	125	17	VARIES	200
SLAB TRANSVERSE ENDS, TOP		5d6	-	-	-	-	-	-	10	VARIES	134	16	VARIES	222
SLAB, TRANSVERSE AT ABUTMENT		8e1	20	26'-4	1406	20	27'-1	1446	20	29'-6	1575	20	34'-8	1851
SLAB, TRANSVERSE AT ABUTMENT		8e2	20	21'-4	1139	20	22'-0	1175	20	24'-5	1304	20	29'-7	1580
SLAB, HAIRPINS, AT ABUTMENT		6e3	92	6'-10	944	92	6'-11	956	92	7'-3	1002	92	7'-11	1094
PIER CAP HOOPS		5h1	72	7'-1	532	72	7'-1	532	72	7'-1	532	108	7'-1	798
PIER CAP ENDS		8h2	4	14'-5	154	4	14'-5	154	4	14'-5	154	4	14'-5	154
PIER CAP, BOTTOM LONGITUDINAL		8h3	8	25'-5	543	8	26'-7	568	8	29'-4	627	8	35'-0	748
PIER CAP, BOTTOM LONGITUDINAL		8h4	8	19'-11	425	8	20'-3	433	8	22'-2	473	8	26'-10	573
PIER CAP, TOP LONGITUDINAL		8h5	4	26'-2	279	4	27'-5	293	4	30'-4	324	4	36'-1	385
PIER CAP, TOP LONGITUDINAL		8h6	4	21'-5	229	4	21'-10	233	4	23'-11	255	4	28'-8	306
TOP OF SLAB, TRANSVERSE, AT RAIL		5j1	152	8'-6	1348	152	8'-6	1348	146	8'-6	1294	144	8'-6	1277
WING, VERTICAL		5m1-4	32	SHOWN	117	32	SHOWN	117	32	SHOWN	117	32	SHOWN	117
WING, HORIZONTAL		5n1	24	6'-8	167	24	6'-8	167	24	6'-8	167	24	6'-8	167
PAVING SUPPORT, TRANSVERSE		5p1	40	8'-10	369	42	8'-10	387	46	8'-10	424	56	8'-10	516
PAVING SUPPORT LONGITUDINAL		5p3	6	22'-9	142	6	24'-0	150	6	26'-5	165	6	31'-9	199
PAVING SUPPORT LONGITUDINAL		5p4	6	20'-0	125	6	20'-9	130	6	23'-1	144	6	28'-3	177
SUB TOTAL - LBS.					49,349			49,829			50,629			52,068
BARRIER RAIL - SEE LIST ON RAIL SHEET J40-46-06					5156			5156			5156			5156
OPEN RAIL - SEE LIST ON RAIL SHEET J40-49-06					5376			5376			5376			5376
TOTAL - LBS.	WITH MONOLITHIC PIER CAP	WITH BARRIER RAIL			54,505			54,985			55,785			57,224
		WITH OPEN RAIL			54,725			55,205			56,005			57,444
TOTAL - LBS.	WITH NON-MONOLITHIC PIER CAP	WITH BARRIER RAIL			52,343			52,772			53,420			54,260
SAME AS ABOVE EXCEPT ALL "h" BARS DELETED		WITH OPEN RAIL			52,563			52,992			53,640			54,480

ESTIMATED QUANTITIES FOR SUPERSTRUCTURE - 80' BRIDGE

ITEM		SKEW	WITH MONOLITHIC PIER CAP 0°	15°	30°	45°	WITH NON-MONOLITHIC PIER CAP 0°	15°	30°	45°
WITH BARRIER RAIL	*STRUCTURAL CONCRETE (BRIDGE)	C.Y.	205.9	207.3	212.0	222.4	199.9	201.1	205.1	214.0
	REINFORCING STEEL EPOXY COATED	LBS.	54,505	54,985	55,785	57,224	52,343	52,772	53,420	54,260
	CONCRETE BARRIER OR OPEN RAIL	LIN. FT.	182.0	182.2	182.9	184.5	182.0	182.2	182.9	184.5
WITH OPEN RAIL	*STRUCTURAL CONCRETE (BRIDGE)	C.Y.	205.7	207.1	211.9	222.2	199.7	200.9	205.0	213.8
	REINFORCING STEEL EPOXY COATED	LBS.	54,725	55,205	56,005	57,444	52,563	52,992	53,640	54,480

* INCLUDES 4 WINGS @ 0.71 C.Y. EACH; EXCLUDES RAIL CONCRETE.

BENT BAR DETAILS

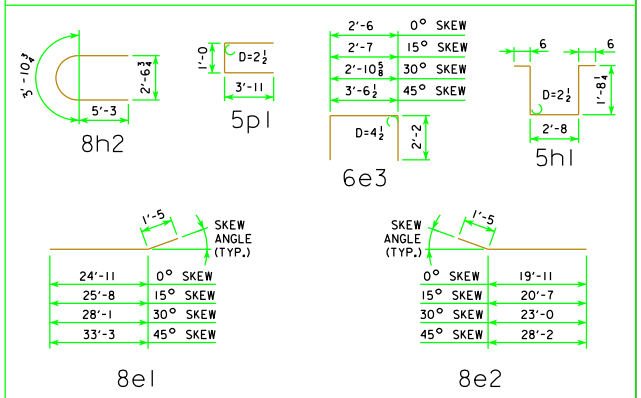

NOTE: ALL DIMENSIONS ARE OUT TO OUT. D = PIN DIAMETER.

NOTES:

ALL REINFORCING STEEL SHALL BE EPOXY COATED.

THE TRANSVERSE REBARS ARE DETAILED WITH A SPLICE LAP. AT THE CONTRACTOR'S OPTION, THIS LAP MAY BE ELIMINATED BY FURNISHING FULL LENGTH BARS WITH NO REDUCTION IN PAY WEIGHT FOR SAME.

REVISED 12-07 - OPEN RAIL REINFORCING QUANTITY CHANGED

12-07
LATEST REVISION DATE

APPROVED BY BRIDGE ENGINEER

Iowa Department of Transportation
Highway Division

STANDARD DESIGN - 40' ROADWAY, 3 SPAN BRIDGES

CONTINUOUS CONCRETE SLAB BRIDGES

NOVEMBER, 2006

SUPERSTRUCTURE DETAILS
80'-0 BRIDGE

J40-05-06