## BILL OF REINFORCING STEEL FOR SUPERSTRUCTURE - 150' BRIDGE

| LOCATION | SHAPE | BAR | 0° NO. | 0° LENGTH | 0° WEIGHT | 15° NO. | 15° LENGTH | 15° WEIGHT | 30° NO. | 30° LENGTH | 30° WEIGHT | 45° NO. | 45° LENGTH | 45° WEIGHT |
|---|---|---|---|---|---|---|---|---|---|---|---|---|---|---|
| SLAB LONGITUDINAL BOTTOM | | 10a1 | 39 | 32'-4 | 5427 | 39 | 32'-4 | 5427 | 39 | 32'-4 | 5427 | 39 | 32'-4 | 5427 |
| SLAB LONGITUDINAL BOTTOM | | 10a2 | 39 | 48'-4 | 8112 | 39 | 48'-4 | 8112 | 39 | 48'-4 | 8112 | 39 | 48'-4 | 8112 |
| SLAB LONGITUDINAL BOTTOM | | 10a3 | 39 | 45'-4 | 7608 | 39 | 45'-4 | 7608 | 39 | 45'-4 | 7608 | 39 | 45'-4 | 7608 |
| SLAB LONGITUDINAL BOTTOM | | 9a4 | 40 | 36'-1 | 4908 | 40 | 36'-1 | 4908 | 40 | 36'-1 | 4908 | 40 | 36'-1 | 4908 |
| SLAB LONGITUDINAL BOTTOM | | 9a5 | 20 | 42'-6 | 2890 | 20 | 42'-6 | 2890 | 20 | 42'-6 | 2890 | 20 | 42'-6 | 2890 |
| SLAB LONGITUDINAL BOTTOM, AT RAIL | | 9a6 | 8 | 43'-11 | 1195 | 8 | 43'-11 | 1195 | 8 | 43'-11 | 1195 | 8 | 43'-11 | 1195 |
| SLAB LONGITUDINAL BOTTOM, AT RAIL | | 9a7 | 8 | 13'-0 | 354 | 8 | 13'-0 | 354 | 8 | 13'-0 | 354 | 8 | 13'-0 | 354 |
| SLAB LONGITUDINAL BOTTOM, AT RAIL | | 9a8 | 4 | 53'-2 | 724 | 4 | 53'-2 | 724 | 4 | 53'-2 | 724 | 4 | 53'-2 | 724 |
| SLAB LONGITUDINAL BOTTOM, AT RAIL | | 10a9 | 8 | 37'-1 | 1277 | 8 | 37'-1 | 1277 | 8 | 37'-1 | 1277 | 8 | 37'-1 | 1277 |
| SLAB LONGITUDINAL BOTTOM, AT RAIL | | 10a10 | 4 | 32'-0 | 551 | 4 | 32'-0 | 551 | 4 | 32'-0 | 551 | 4 | 32'-0 | 551 |
| SLAB LONGITUDINAL TOP | | 6b1 | 39 | 6'-4 | 371 | 39 | 6'-4 | 371 | 39 | 6'-4 | 371 | 39 | 6'-4 | 371 |
| SLAB LONGITUDINAL TOP | | 11b2 | 39 | 30'-3 | 6269 | 39 | 30'-3 | 6269 | 39 | 30'-3 | 6269 | 39 | 30'-3 | 6269 |
| SLAB LONGITUDINAL TOP | | 11b3 | 39 | 26'-0 | 5388 | 39 | 26'-0 | 5388 | 39 | 26'-0 | 5388 | 39 | 26'-0 | 5388 |
| SLAB LONGITUDINAL TOP | | 8b4 | 39 | 32'-2 | 3350 | 39 | 32'-2 | 3350 | 39 | 32'-2 | 3350 | 39 | 32'-2 | 3350 |
| SLAB LONGITUDINAL TOP | | 11b5 | 40 | 27'-6 | 5845 | 40 | 27'-6 | 5845 | 40 | 27'-6 | 5845 | 40 | 27'-6 | 5845 |
| SLAB LONGITUDINAL TOP | | 6b6 | 20 | 39'-0 | 1172 | 20 | 39'-0 | 1172 | 20 | 39'-0 | 1172 | 20 | 39'-0 | 1172 |
| SLAB LONGITUDINAL TOP, AT RAIL | | 6b8 | 8 | 34'-6 | 415 | 8 | 34'-6 | 415 | 8 | 34'-6 | 415 | 8 | 34'-6 | 415 |
| SLAB LONGITUDINAL TOP, AT RAIL | | 11b9 | 8 | 33'-0 | 1403 | 8 | 33'-0 | 1403 | 8 | 33'-0 | 1403 | 8 | 33'-0 | 1403 |
| SLAB LONGITUDINAL TOP, AT RAIL | | 6b10 | 4 | 29'-4 | 177 | 4 | 29'-4 | 177 | 4 | 29'-4 | 177 | 4 | 29'-4 | 177 |
| SLAB LONGITUDINAL TOP, AT RAIL | | 7b11 | 8 | 40'-0 | 655 | 8 | 40'-0 | 655 | 8 | 40'-0 | 655 | 8 | 40'-0 | 655 |
| SLAB LONGITUDINAL TOP, AT RAIL | | 11b12 | 8 | 23'-0 | 978 | 8 | 23'-0 | 978 | 8 | 23'-0 | 978 | 8 | 23'-0 | 978 |
| SLAB TRANSVERSE, BOTTOM | | 6c1 | 147 | 32'-10 | 7250 | 147 | 34'-0 | 7507 | 136 | 32'-10 | 6707 | 124 | 32'-10 | 6116 |
| SLAB TRANSVERSE ENDS, BOTTOM | | 6c2 | - | - | - | - | - | - | 28 | VARIES | 800 | 52 | VARIES | 1426 |
| SLAB TRANSVERSE, TOP | | 5d1 | 147 | 32'-10 | 5035 | 147 | 34'-0 | 5213 | 136 | 32'-10 | 4658 | 124 | 32'-10 | 4247 |
| SLAB TRANSVERSE ENDS, TOP | | 5d2 | - | - | - | - | - | - | 28 | VARIES | 555 | 52 | VARIES | 990 |
| SLAB, TRANSVERSE AT ABUTMENT | | 8e1 | 20 | 32'-10 | 1754 | - | - | - | - | - | - | - | - | - |
| SLAB, TRANSVERSE AT ABUTMENT | | 8e2 | - | - | - | 20 | 33'-11 | 1812 | 20 | 37'-6 | 2003 | 20 | 45'-4 | 2421 |
| SLAB, HAIRPINS, AT ABUTMENT | | 6e3 | 72 | 6'-10 | 739 | 72 | 6'-11 | 748 | 72 | 7'-3 | 785 | 72 | 7'-11 | 857 |
| PIER CAP HOOPS | | 5h1 | 44 | 8'-6 | 391 | 44 | 8'-6 | 391 | 44 | 8'-6 | 391 | 66 | 8'-6 | 586 |
| PIER CAP ENDS | | 8h2 | 4 | 14'-5 | 154 | 4 | 14'-5 | 154 | 4 | 14'-5 | 154 | 4 | 14'-5 | 154 |
| PIER CAP, BOTTOM LONGITUDINAL | | 8h3 | 8 | 29'-10 | 638 | 8 | 30'-11 | 661 | 8 | 34'-5 | 736 | 8 | 42'-2 | 901 |
| PIER CAP, TOP LONGITUDINAL | | 8h4 | 4 | 32'-10 | 351 | 4 | 34'-0 | 364 | 4 | 37'-11 | 405 | 4 | 46'-6 | 497 |
| TOP OF SLAB, TRANSVERSE, AT RAIL | | 5j1 | 292 | 8'-6 | 2589 | 292 | 8'-6 | 2589 | 292 | 8'-6 | 2589 | 290 | 8'-6 | 2571 |
| WING, VERTICAL | | 5m1-4 | 32 | SHOWN | 117 | 32 | SHOWN | 117 | 32 | SHOWN | 117 | 32 | SHOWN | 117 |
| WING, HORIZONTAL | | 5n1 | 24 | 6'-8 | 167 | 24 | 6'-8 | 167 | 24 | 6'-8 | 167 | 24 | 6'-8 | 167 |
| PAVING SUPPORT, TRANSVERSE | | 5p1 | 30 | 8'-10 | 277 | 32 | 8'-10 | 295 | 34 | 8'-10 | 314 | 42 | 8'-10 | 387 |
| PAVING SUPPORT LONGITUDINAL | | 5p3 | 6 | 30'-2 | 189 | 6 | 31'-3 | 196 | 6 | 34'-10 | 218 | 6 | 42'-7 | 267 |
| SUB TOTAL - LBS. | | | | | 78,720 | | | 79,283 | | | 79,668 | | | 80,773 |
| BARRIER RAIL - SEE LIST ON RAIL SHEET J30-41-06 | | | | | 8853 | | | 8853 | | | 8853 | | | 8853 |
| OPEN RAIL - SEE LIST ON RAIL SHEET J30-44-06 | | | | | 9182 | | | 9182 | | | 9182 | | | 9182 |
| TOTAL - LBS. WITH MONOLITHIC PIER CAP | | WITH BARRIER RAIL | | | 87,573 | | | 88,136 | | | 88,521 | | | 89,626 |
| | | WITH OPEN RAIL | | | 87,902 | | | 88,465 | | | 88,850 | | | 89,955 |
| TOTAL - LBS. WITH NON-MONOLITHIC PIER CAP | | WITH BARRIER RAIL | | | 86,039 | | | 86,566 | | | 86,835 | | | 87,488 |
| SAME AS ABOVE EXCEPT ALL "h" BARS DELETED | | WITH OPEN RAIL | | | 86,368 | | | 86,895 | | | 87,164 | | | 87,817 |

## BENT BAR DETAILS

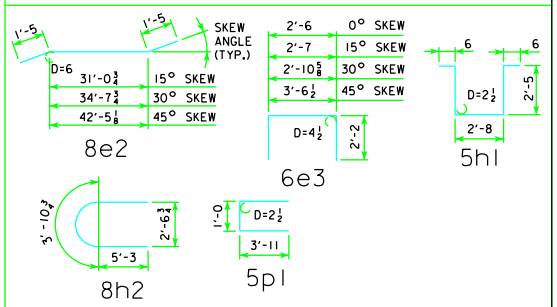


NOTE: ALL DIMENSIONS ARE OUT TO OUT. D = PIN DIAMETER.

## ESTIMATED QUANTITIES FOR SUPERSTRUCTURE - 150' BRIDGE

| ITEM | | SKEW | WITH MONOLITHIC PIER CAP 0° | 15° | 30° | 45° | WITH NON-MONOLITHIC PIER CAP 0° | 15° | 30° | 45° |
|---|---|---|---|---|---|---|---|---|---|---|
| WITH | *STRUCTURAL CONCRETE (BRIDGE) | C.Y. | 399.8 | 400.7 | 404.0 | 411.2 | 394.8 | 395.6 | 398.4 | 404.3 |
| BARRIER RAIL | REINFORCING STEEL | LBS. | 87,573 | 88,136 | 88,521 | 89,626 | 86,039 | 86,566 | 86,835 | 87,488 |
| | CONCRETE BARRIER OR OPEN RAIL | LIN. FT. | 322.0 | 322.2 | 322.9 | 324.5 | 322.0 | 322.2 | 322.9 | 324.5 |
| WITH | *STRUCTURAL CONCRETE (BRIDGE) | C.Y. | 399.5 | 400.5 | 403.8 | 410.9 | 394.5 | 395.3 | 398.1 | 404.0 |
| OPEN RAIL | REINFORCING STEEL | LBS. | 87,902 | 88,465 | 88,850 | 89,955 | 86,368 | 86,895 | 87,164 | 87,817 |

* INCLUDES 4 WINGS @ 0.71 C.Y. EACH; EXCLUDES RAIL CONCRETE.

REVISED 12-07 - OPEN RAIL REINFORCING QUANTITY CHANGED

12-07
LATEST REVISION DATE

APPROVED BY BRIDGE ENGINEER

Iowa Department of Transportation
Highway Division

STANDARD DESIGN - 30' ROADWAY, 3 SPAN BRIDGES

CONTINUOUS CONCRETE SLAB BRIDGES

NOVEMBER, 2006

SUPERSTRUCTURE DETAILS
150'-0 BRIDGE

NON-EPOXY COATED REINFORCING

J30-19B-06