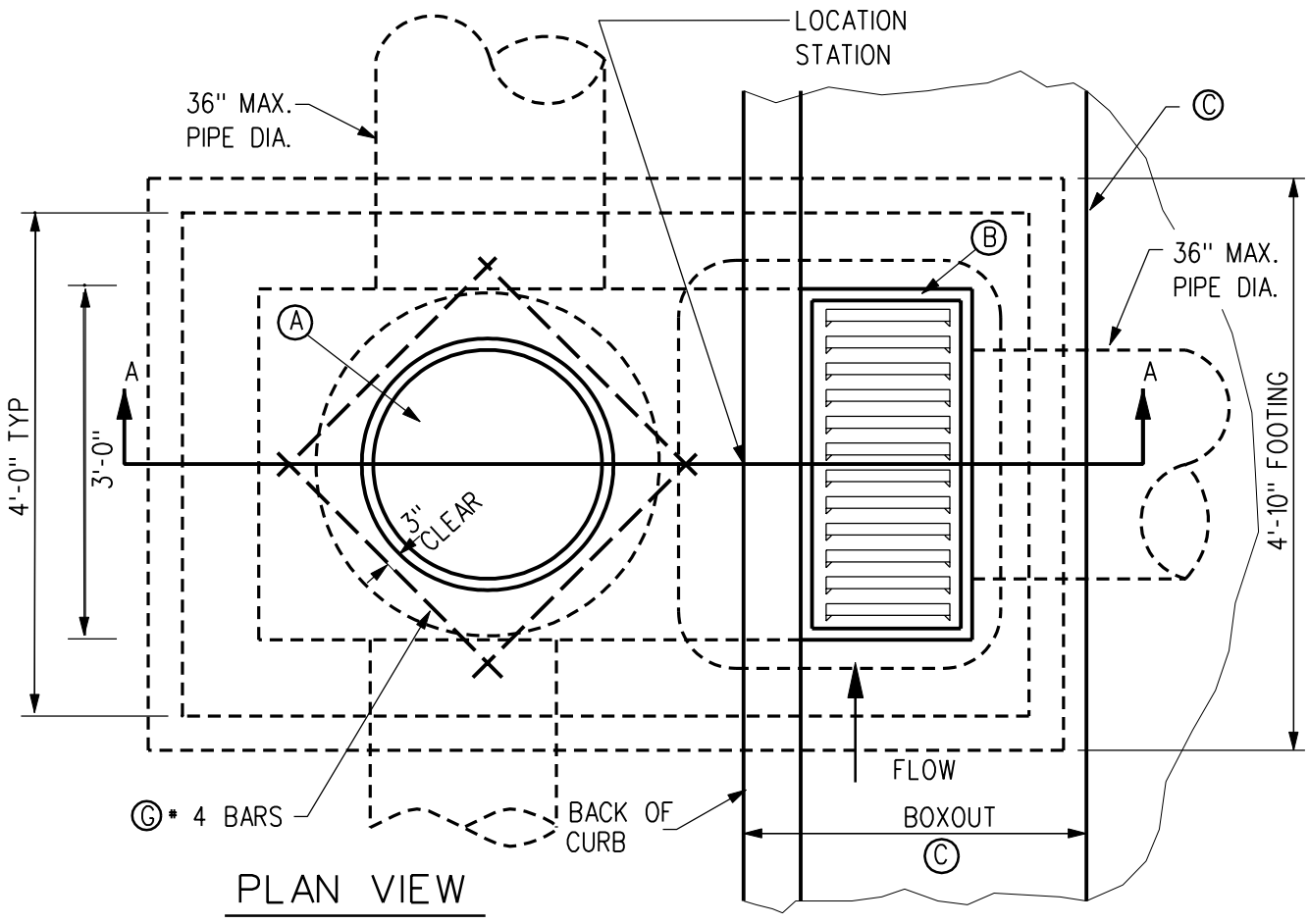

PLAN VIEW

NOTE REFERENCE

Ⓐ STANDARD RING & COVER TYPE 'E' CASTING

Ⓑ INTAKE CASTING SEE SPECIFICATIONS OR PLANS

Ⓒ SEE FIGURE 6030.16 FOR BOXOUT DETAILS

Ⓓ OPTIONAL CONSTRUCTION JOINT. SECURE WITH KEYWAY (SHOWN) OR #4 x 12" REBAR DOWELS AT 12" SPACING ALL AROUND.

Ⓔ CONCRETE BASE-POURED IN PLACE

Ⓕ UNDISTURBED SOIL

Ⓖ 4- #4 BARS 3'-0' DIAGONAL

Ⓗ CONCRETE SHAPED INVERT

Ⓘ ADJUSTING RINGS (24" DIA.)

Ⓙ ADJUSTING RINGS (2'-0" X 3'-0")

FOR ADDITIONAL DETAILS SEE SHEET 2.

REV.	DATE	BY		
2	10/21/03		SINGLE, TYPE "M-C" INTAKE COMBINATION	FIGURE: 6030.3
DATE: 01-01-98				SHEET 1 OF 2

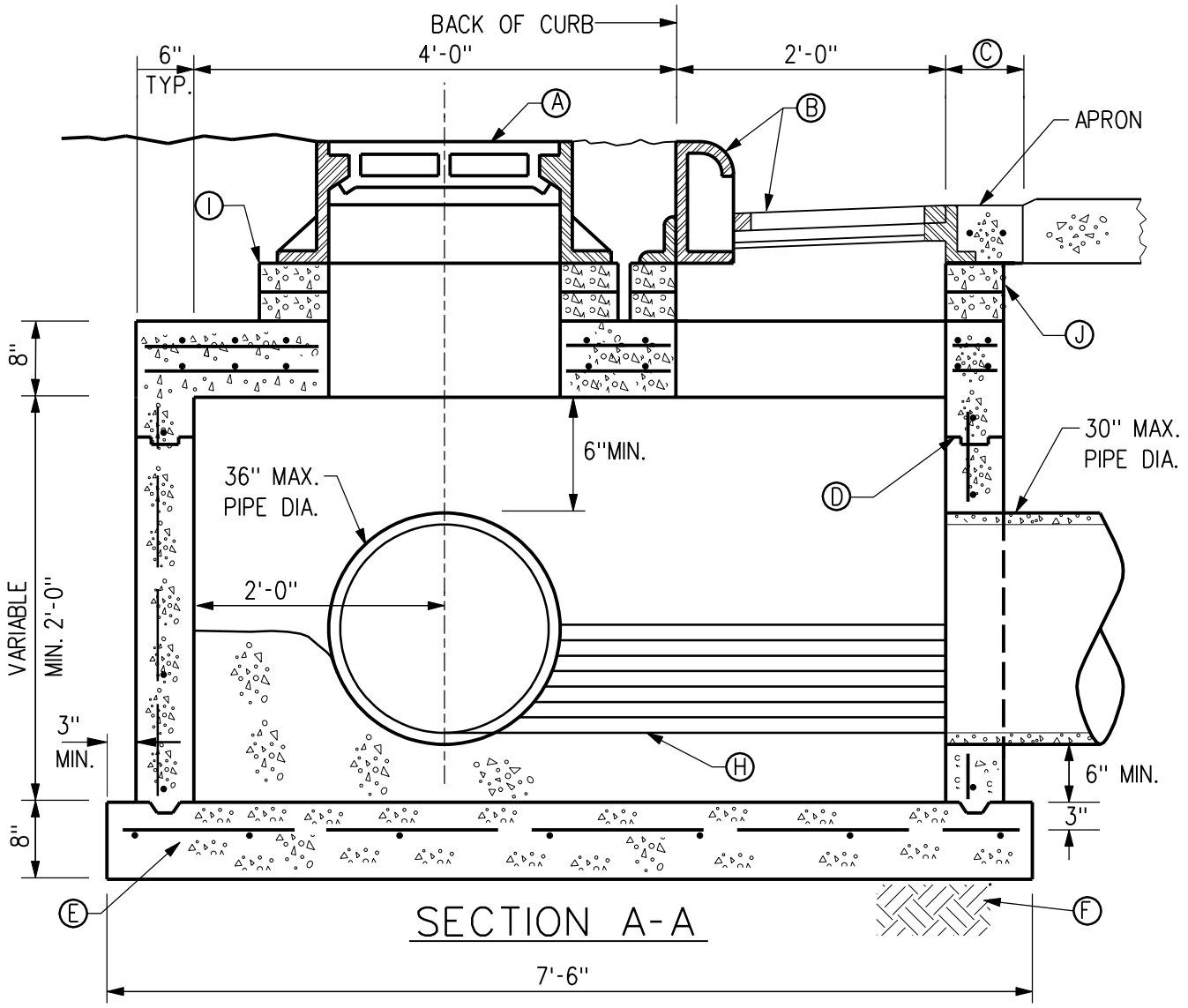

REINFORCING BARS:
1. ALL BARS #4
2. TOP-AS SHOWN, 12" MAX.
3. WALLS-12" EACH WAY
4. BOTTOM-12" EACH WAY
5. APRON-TWO #4 BARS EACH SIDE

MAX. DEPTH: 7' FROM TOP OF CURB TO INVERT

PIPE SIZE:
MAXIMUM ALLOWABLE PIPE DIAMETERS SHOWN ARE FOR CAST-IN-PLACE STRUCTURES. FOR PRECAST STRUCTURES, THE MAXIMUM ALLOWABLE DIAMETER SHALL BE ONE (1) STANDARD PIPE SIZE SMALLER THAN THOSE SHOWN. ACTUAL PIPE SIZE SHALL BE AS SHOWN THE PLANS

REV.	DATE	BY	SINGLE, TYPE "M-C" INTAKE COMBINATION	FIGURE: 6030.3
3	10/21/03			
DATE: 01-01-98				SHEET 2 OF 2