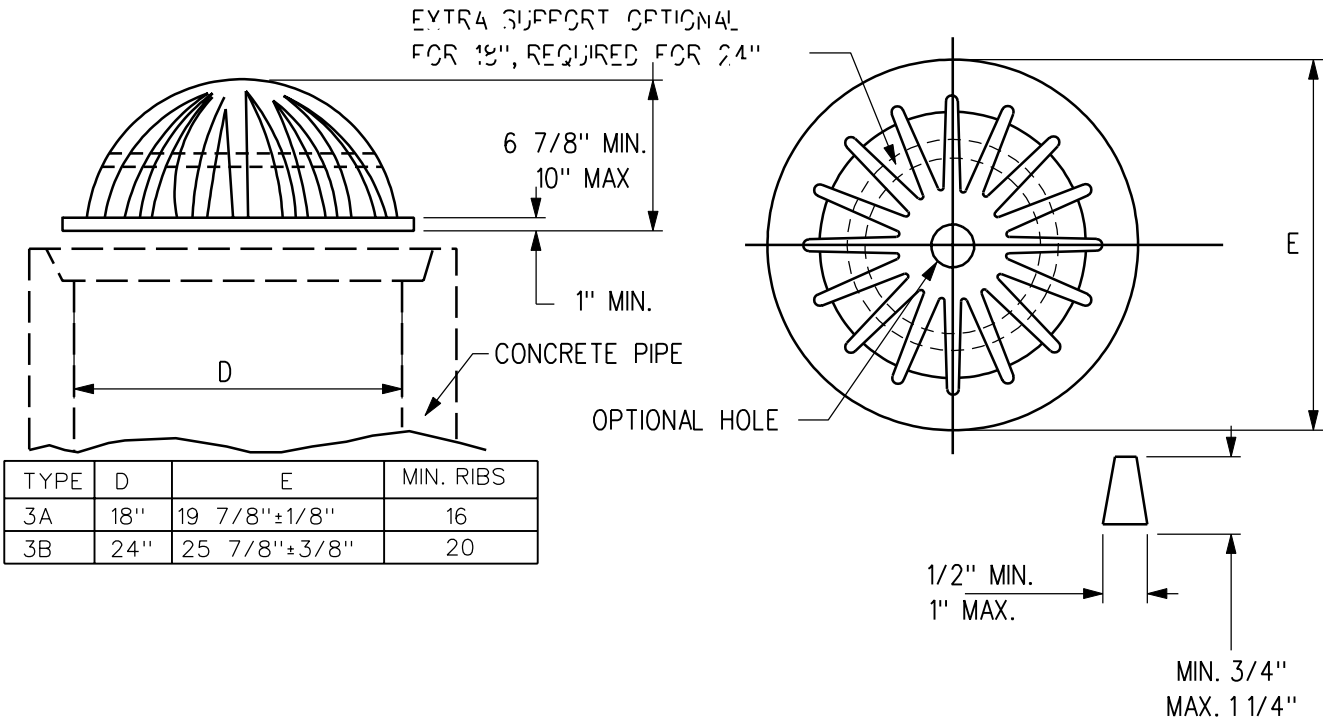

TYPE	D	E	MIN. RIBS
3A	18"	19 7/8"±1/8"	16
3B	24"	25 7/8"±3/8"	20

TYPE 3 GRATE

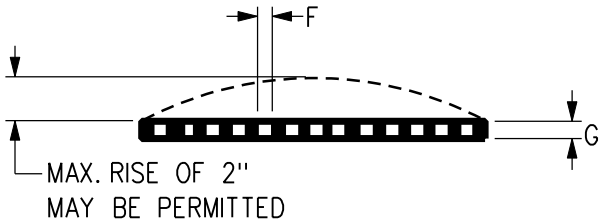

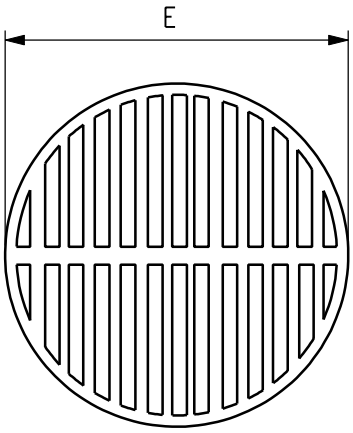

TYPE	D	E	F	G
4A	18"	19 7/8"±1/8"	3/4" MIN.	1 1/2" MIN.
4B	24"	25 7/8"±1/4"	3/4" MIN.	1 1/2" MIN.
4C	30"	32 1/4"±1/4"	1" MIN.	2" MIN.
4D	36"	38 1/4"±1/4"	1" MIN.	2" MIN.

TYPE 4 GRATE

REV.	DATE	BY
3	10/2002	
2	01/25/01	
1	JAN, 1999	

DATE: 03-03-98

TYPE 3 AND TYPE 4 INTAKE GRATE

FIGURE: 6030.15

SHEET 1 OF 1