BILL OF REINFORCING STEEL FOR SUPERSTRUCTURE - 120' BRIDGE

LOCATION	SHAPE	BAR	0° NO.	0° LENGTH	0° WEIGHT	15° NO.	15° LENGTH	15° WEIGHT	30° NO.	30° LENGTH	30° WEIGHT	45° NO.	45° LENGTH	45° WEIGHT
SLAB LONGITUDINAL BOTTOM		9a1	53	28'-1	5061	53	28'-1	5061	53	28'-1	5061	53	28'-1	5061
SLAB LONGITUDINAL BOTTOM		9a2	53	41'-3	7434	53	41'-3	7434	53	41'-3	7434	53	41'-3	7434
SLAB LONGITUDINAL BOTTOM		9a3	53	38'-9	6983	53	38'-9	6983	53	38'-9	6983	53	38'-9	6983
SLAB LONGITUDINAL BOTTOM		8a4	52	30'-4	4212	52	30'-4	4212	52	30'-4	4212	52	30'-4	4212
SLAB LONGITUDINAL BOTTOM		9a5	26	36'-6	3227	26	36'-6	3227	26	36'-6	3227	26	36'-6	3227
SLAB LONGITUDINAL BOTTOM, AT RAIL		9a6	8	37'-2	1011	8	37'-2	1011	8	37'-2	1011	8	37'-2	1011
SLAB LONGITUDINAL BOTTOM, AT RAIL		9a7	8	12'-0	327	8	12'-0	327	8	12'-0	327	8	12'-0	327
SLAB LONGITUDINAL BOTTOM, AT RAIL		9a8	4	45'-8	622	4	45'-8	622	4	45'-8	622	4	45'-8	622
SLAB LONGITUDINAL BOTTOM, AT RAIL		8a9	8	26'-7	568	8	26'-7	568	8	26'-7	568	8	26'-7	568
SLAB LONGITUDINAL BOTTOM, AT RAIL		8a10	4	25'-6	273	4	25'-6	273	4	25'-6	273	4	25'-6	273
SLAB LONGITUDINAL TOP		7b1	53	7'-10	849	53	7'-10	849	53	7'-10	849	53	7'-10	849
SLAB LONGITUDINAL TOP		10b2	53	29'-6	6728	53	29'-6	6728	53	29'-6	6728	53	29'-6	6728
SLAB LONGITUDINAL TOP		10b3	53	26'-9	6101	53	26'-9	6101	53	26'-9	6101	53	26'-9	6101
SLAB LONGITUDINAL TOP		7b4	53	22'-1	2393	53	22'-1	2393	53	22'-1	2393	53	22'-1	2393
SLAB LONGITUDINAL TOP		11b5	52	30'-3	8358	52	30'-3	8358	52	30'-3	8358	52	30'-3	8358
SLAB LONGITUDINAL TOP		6b6	26	28'-4	1107	26	28'-4	1107	26	28'-4	1107	26	28'-4	1107
SLAB LONGITUDINAL TOP, AT RAIL		6b8	8	27'-10	335	8	27'-10	335	8	27'-10	335	8	27'-10	335
SLAB LONGITUDINAL TOP, AT RAIL		10b9	8	29'-0	999	8	29'-0	999	8	29'-0	999	8	29'-0	999
SLAB LONGITUDINAL TOP, AT RAIL		6b10	4	23'-0	139	4	23'-0	139	4	23'-0	139	4	23'-0	139
SLAB LONGITUDINAL TOP, AT RAIL		6b11	8	30'-4	365	8	30'-4	365	8	30'-4	365	8	30'-4	365
SLAB LONGITUDINAL TOP, AT RAIL		11b12	8	23'-0	978	8	23'-0	978	8	23'-0	978	8	23'-0	978
SLAB TRANSVERSE BOTTOM		6c1	117	23'-5	4116	117	24'-3	4262	110	23'-5	3869	102	23'-5	3588
SLAB TRANSVERSE BOTTOM		6c2	117	21'-3	3735	117	22'-0	3867	111	21'-3	3543	104	21'-3	3320
SLAB TRANSVERSE ENDS, BOTTOM		6c3	-	-	-	-	-	-	11	VARIES	226	18	VARIES	386
SLAB TRANSVERSE ENDS, BOTTOM		6c4	-	-	-	-	-	-	10	VARIES	219	18	VARIES	363
SLAB TRANSVERSE ENDS, BOTTOM		6c5	-	-	-	-	-	-	10	VARIES	180	17	VARIES	288
SLAB TRANSVERSE ENDS, BOTTOM		6c6	-	-	-	-	-	-	10	VARIES	193	16	VARIES	319
SLAB TRANSVERSE TOP		5d1	117	23'-9	2899	117	24'-7	3000	110	23'-9	2725	102	23'-9	2527
SLAB TRANSVERSE TOP		5d2	117	21'-3	2594	117	22'-0	2685	111	21'-3	2461	104	21'-3	2306
SLAB TRANSVERSE ENDS, TOP		5d3	-	-	-	-	-	-	11	VARIES	157	18	VARIES	268
SLAB TRANSVERSE ENDS, TOP		5d4	-	-	-	-	-	-	10	VARIES	152	18	VARIES	252
SLAB TRANSVERSE ENDS, TOP		5d5	-	-	-	-	-	-	10	VARIES	125	17	VARIES	200
SLAB TRANSVERSE ENDS, TOP		5d6	-	-	-	-	-	-	10	VARIES	134	16	VARIES	222
SLAB, TRANSVERSE AT ABUTMENT		8e1	20	26'-4	1407	20	27'-1	1447	20	29'-6	1576	20	34'-8	1852
SLAB, TRANSVERSE AT ABUTMENT		8e2	20	21'-4	1140	20	22'-0	1175	20	24'-5	1304	20	29'-7	1580
SLAB, HAIRPINS, AT ABUTMENT		6e3	92	6'-10	945	92	6'-11	956	92	7'-3	1002	92	7'-11	1094
PIER CAP HOOPS		5h1	72	7'-10	589	72	7'-10	589	72	7'-10	589	96	7'-10	785
PIER CAP ENDS		8h2	4	14'-5	154	4	14'-5	154	4	14'-5	154	4	14'-5	154
PIER CAP, BOTTOM LONGITUDINAL		8h3	8	25'-5	543	8	26'-7	568	8	29'-4	627	8	35'-0	748
PIER CAP, BOTTOM LONGITUDINAL		8h4	8	19'-11	426	8	20'-3	433	8	22'-2	474	8	26'-10	574
PIER CAP, TOP LONGITUDINAL		8h5	4	26'-2	280	4	27'-5	293	4	30'-4	324	4	36'-1	386
PIER CAP, TOP LONGITUDINAL		8h6	4	21'-5	229	4	21'-10	234	4	23'-11	256	4	28'-8	307
TOP OF SLAB, TRANSVERSE, AT RAIL		5j1	232	8'-6	2057	232	8'-6	2057	226	8'-6	2004	224	8'-6	1986
WING, VERTICAL		5m1-4	32	SHOWN	117	32	SHOWN	117	32	SHOWN	117	32	SHOWN	117
WING, HORIZONTAL		5n1	24	6'-8	167	24	6'-8	167	24	6'-8	167	24	6'-8	167
PAVING SUPPORT, TRANSVERSE		5p1	40	8'-10	369	42	8'-10	387	46	8'-10	424	56	8'-10	516
PAVING SUPPORT LONGITUDINAL		5p3	6	22'-9	143	6	24'-0	151	6	26'-5	166	6	31'-9	199
PAVING SUPPORT LONGITUDINAL		5p4	6	20'-0	126	6	20'-9	130	6	23'-1	145	6	28'-3	177
SUB TOTAL - LBS.					80,106			80,742			81,383			82,751
BARRIER RAIL - SEE LIST ON RAIL SHEET J40-46-06					7228			7228			7228			7228
OPEN RAIL - SEE LIST ON RAIL SHEET J40-49-06					7340			7340			7340			7340
TOTAL - LBS. WITH MONOLITHIC PIER CAP		WITH BARRIER RAIL			87,334			87,970			88,611			89,979
		WITH OPEN RAIL			87,446			88,082			88,723			90,091
TOTAL - LBS. WITH NON-MONOLITHIC PIER CAP		WITH BARRIER RAIL			85,113			85,699			86,187			87,025
SAME AS ABOVE EXCEPT ALL "h" BARS DELETED		WITH OPEN RAIL			85,225			85,811			86,299			87,137

BENT BAR DETAILS

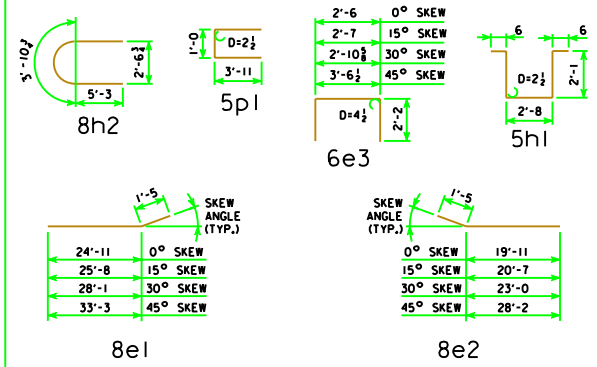

NOTE: ALL DIMENSIONS ARE OUT TO OUT. D = PIN DIAMETER.

NOTES:

ALL REINFORCING STEEL SHALL BE EPOXY COATED.

THE TRANSVERSE REBARS ARE DETAILED WITH A SPLICE LAP. AT THE CONTRACTOR'S OPTION, THIS LAP MAY BE ELIMINATED BY FURNISHING FULL LENGTH BARS WITH NO REDUCTION IN PAY WEIGHT FOR SAME.

ESTIMATED QUANTITIES FOR SUPERSTRUCTURE - 120' BRIDGE

ITEM		SKEW	WITH MONOLITHIC PIER CAP 0°	15°	30°	45°	WITH NON-MONOLITHIC PIER CAP 0°	15°	30°	45°
WITH BARRIER RAIL	*STRUCTURAL CONCRETE (BRIDGE)	C.Y.	361.3	362.6	367.1	377.0	355.3	356.4	360.2	368.6
	REINFORCING STEEL EPOXY COATED	LBS.	87,334	87,970	88,611	89,979	85,113	85,699	86,187	87,025
	CONCRETE BARRIER OR OPEN RAIL	LIN. FT.	262.0	262.2	262.9	264.5	262.0	262.2	262.9	264.5
WITH OPEN RAIL	*STRUCTURAL CONCRETE (BRIDGE)	C.Y.	361.1	362.4	366.9	376.7	355.0	356.2	360.0	368.3
	REINFORCING STEEL EPOXY COATED	LBS.	87,446	88,082	88,723	90,091	85,225	85,811	86,299	87,137

* INCLUDES 4 WINGS @ 0.71 C.Y. EACH; EXCLUDES RAIL CONCRETE.

LATEST REVISION DATE

APPROVED BY BRIDGE ENGINEER

Iowa Department of Transportation
Highway Division

STANDARD DESIGN - 40' ROADWAY, 3 SPAN BRIDGES

CONTINUOUS CONCRETE SLAB BRIDGES

NOVEMBER, 2006

SUPERSTRUCTURE DETAILS
120'-0 BRIDGE

J40-13-06