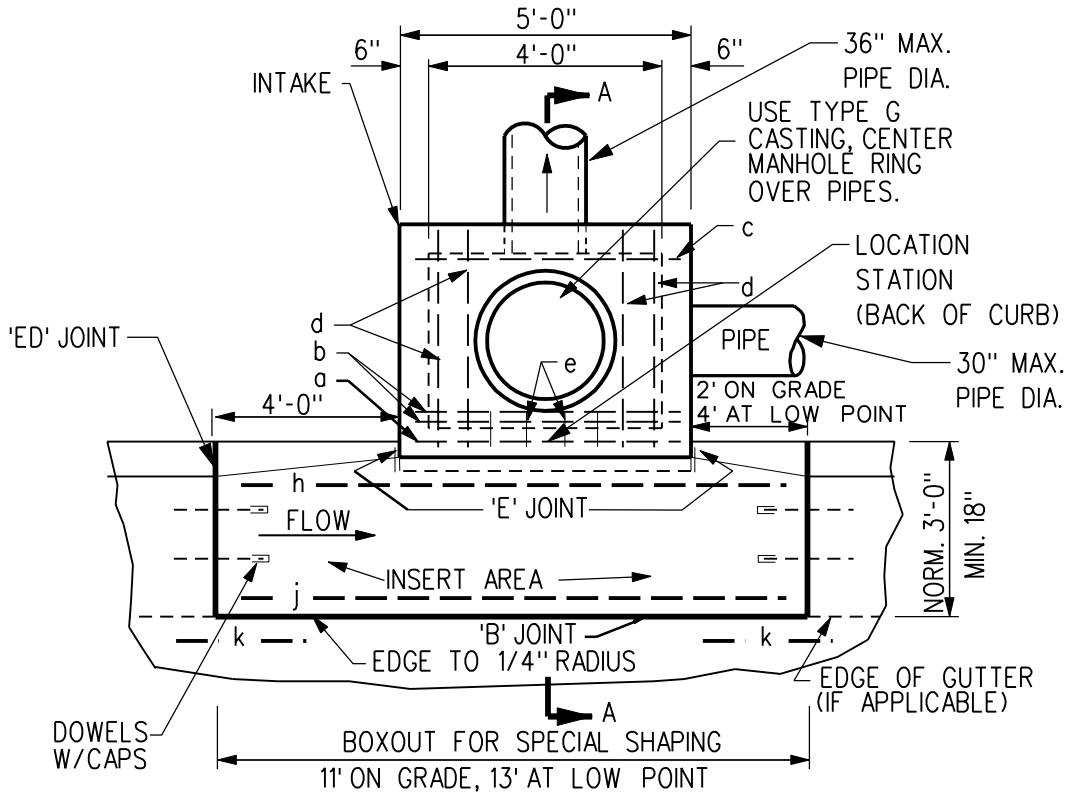

PLAN VIEW

REINFORCING SCHEDULE			
MARK	LENGTH	NUMBER	SPACING
a	4'-9"	2	SEE DETAIL
b	4'-9"	3	SEE DETAIL
c	4'-9"	4	----------
d	3'-4"	4	SEE DETAIL
e	1'-2"	8	6"
f	4'-9"	4	13" +-
g	3'-9"	5	13" +-
h	① 10'-6"	2	SEE DETAIL
j	① 10'-6"	2	SEE DETAIL
k	② 3'-0"	2	SEE DETAIL

NOTE: ALL REINFORCING STEEL 1/2" DIA. PLACED APPROXIMATELY 1-1/2" CLEAR OF CONCRETE SURFACES

① 2' LONGER WHEN USING 13' BOXOUT.
② OMIT "k" IF ADJACENT PAVING IS HMA

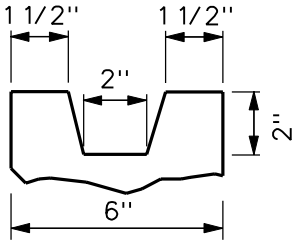

KEYED CONST. JOINT

PIPE SIZE:

MAXIMUM ALLOWABLE PIPE DIAMETERS SHOWN ARE FOR CAST-IN-PLACE STRUCTURES. FOR PRECAST STRUCTURES, THE MAXIMUM ALLOWABLE DIAMETER SHALL BE ONE (1) STANDARD PIPE SIZE SMALLER THAN THOSE SHOWN. ACTUAL PIPE SIZE SHALL BE AS SHOWN ON THE PLANS.

GENERAL NOTES:

ANY TRANSVERSE PAVEMENT JOINTS SHALL STOP AT EDGE OF INSERT AREA. JOINT LOCATIONS SHALL BE AS INDICATED HEREON, EXCEPT WHERE SPECIFICALLY MODIFIED BY OTHER PLAN DRAWINGS OR BY THE ENGINEER. JOINT AT END OF INSERT SHALL EXTEND THROUGH TO AN OPPOSITE FORM LINE.

FOR ADDITIONAL DETAILS
SEE SHEET 2.

REV.	DATE	BY	"OPEN THROAT" TYPE M-F INTAKE	FIGURE: 6030.7
2	10/21/03			
DATE: 01-01-98				SHEET 1 OF 2

NOTE: SHAPE OF CURB SHOWN IS FOR NORMAL 6" CURB, DESIGN MAY BE MODIFIED TO ACCOMMODATE OTHER CURB DESIGN WHEN NECESSARY

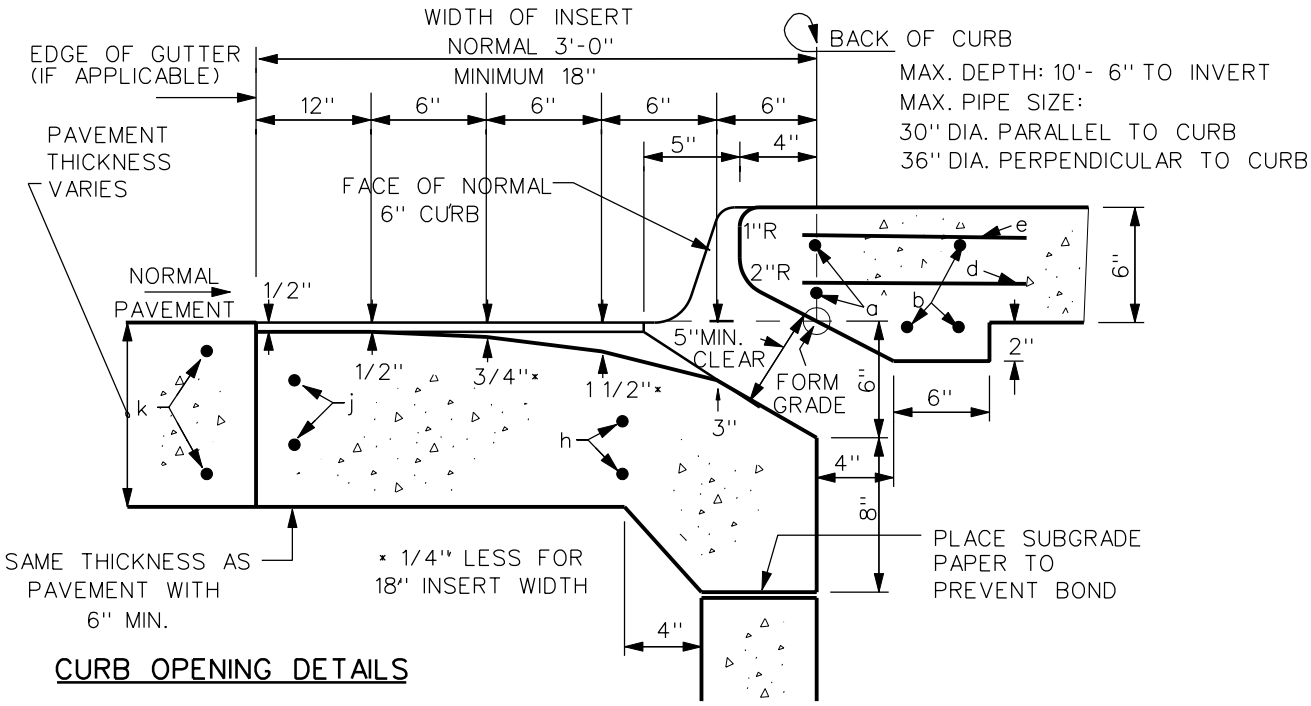

CURB OPENING DETAILS

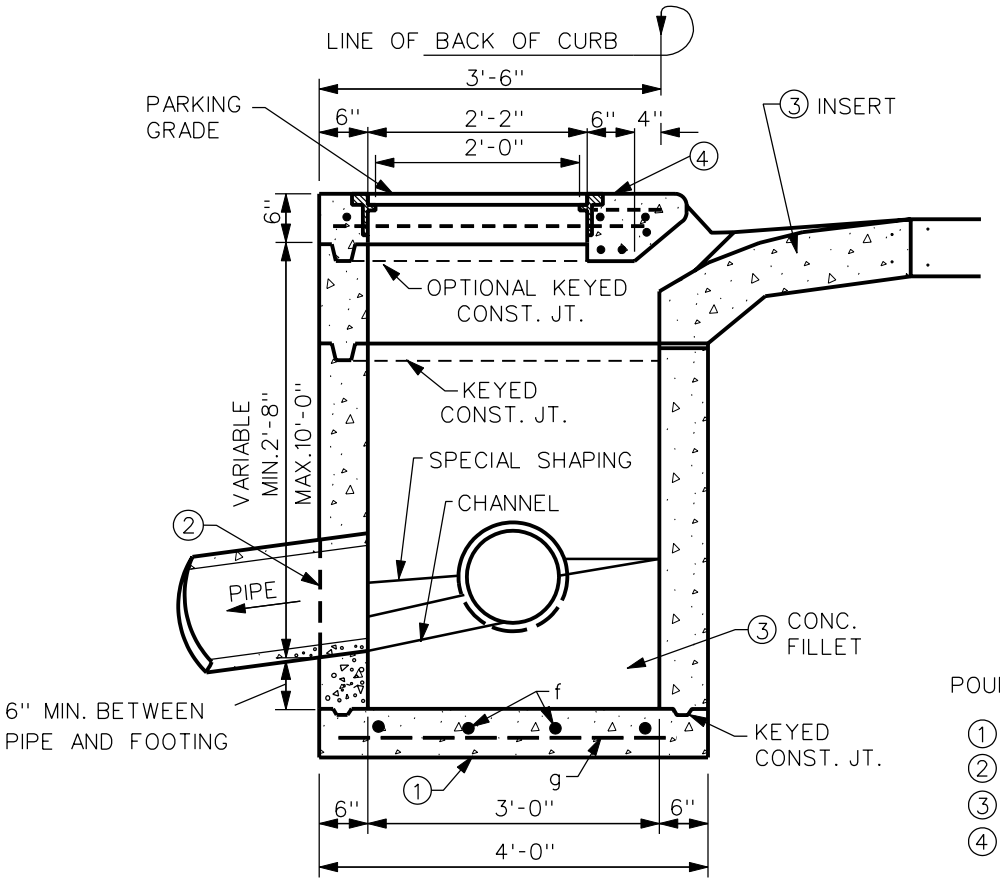

POURING SEQUENCE:

1. BASE
2. WALLS
3. INSERT & FILLET
4. TOP

SECTION A-A

REV.	DATE	BY
2	10/18/05	

DATE: 01-01-98

"OPEN THROAT" TYPE M-F INTAKE

FIGURE: 6030.7

SHEET 2 OF 2