TAPER SECTION DETAILS

Estimated quantity of concrete for one taper section is 0.44 cubic meters.

Taper section is not designed for use within the clear zone on high-speed facilities. Taper section is not needed if end of barrier rail is protected with crash cushion.

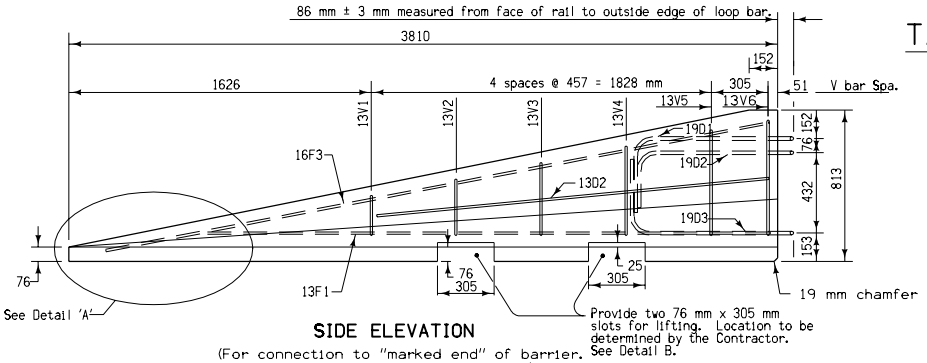

SIDE ELEVATION

(For connection to "marked end" of barrier. Invert loop bars for other end.)

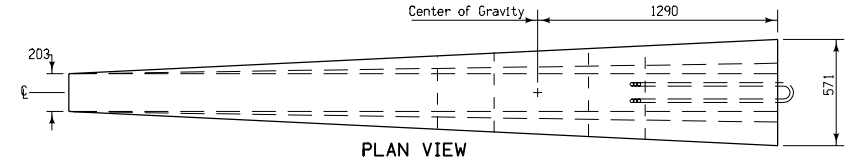

PLAN VIEW

Per 3810 mm Barrier Taper Section

REINFORCING A615M Gr. 420					
Bar	Bar Size	Shape	No. of Bars	Length mm	Weight kg
13V1	13	[	2	584	1.2
13V2	13	[	2	660	1.3
13V3	13	[	2	762	1.5
13V4	13	[	2	838	1.7
13V5	13	[	2	965	1.9
13V6	13	[	2	1016	2.0
13F1	13	—	2	3658	7.3
13F2	13	—	2	2286	4.5
13F3	16	—	1	3581	5.6
LOOP ASSEMBLY					
19D1	19	⌐	1	2565	5.7
19D2	19	⌐	1	2311	5.2
19D3	19	⌐	1	2591	5.8

① 25 mm radius allowed.

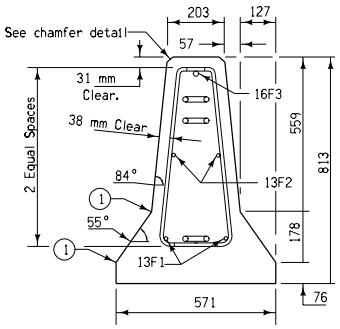

END SECTION

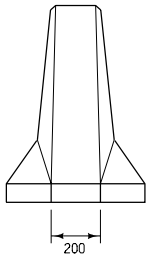

FRONT ELEVATION

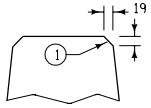

CHAMFER DETAIL

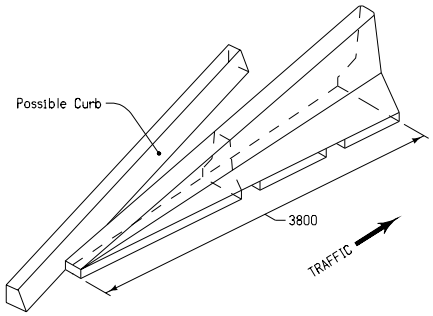

PERSPECTIVE VIEW

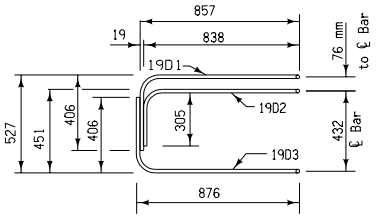

Elevation

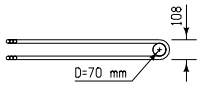

Plan

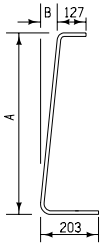

13V bars

2 at each size required for stirrup assembly

LOOP BAR ASSEMBLY

(Left Barrier Connection shown, invert for other end)

Bar	A	B
V1	254	25
V2	330	32
V3	432	41
V4	508	48
V5	622	60
V6	686	70

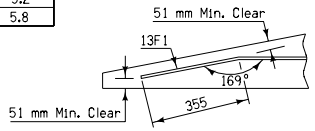

DETAIL 'A'
BENT BAR DETAIL

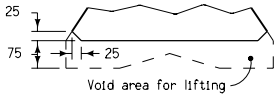

DETAIL 'B'
LIFTING SLOT DETAIL

All dimensions given in millimeters unless noted.

M

METRIC VERSION

Iowa Department of Transportation

STANDARD ROAD PLAN

REVISION	
1	10-17-06

RE-71(4)

SHEET 4 of 4

REVISIONS: Added note clarifying when TBR taper section may be used.

Deanna Maifield

APPROVED BY DESIGN METHODS ENGINEER

TEMPORARY BARRIER RAIL
(PRECAST CONCRETE)