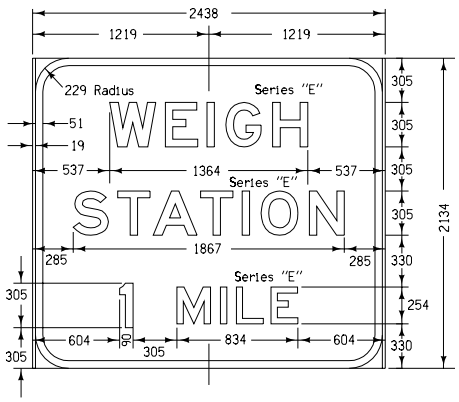

W 319	63	E 224	63	I 52	78	G 243	78	H 243

S 243	63	T 224	21	A 305	21	T 224	63	I 52	78	O 252	78	N 243

1 90	305	M 234	65	I 44	65	L 186	52	E 186

D8-1C

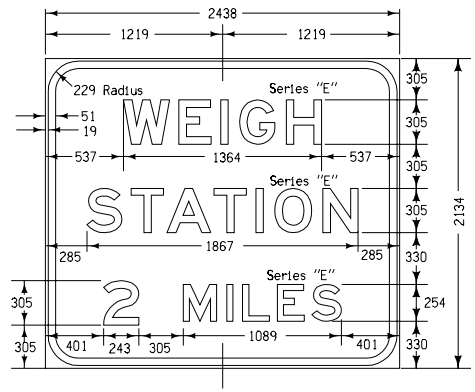

W 319	63	E 224	63	I 52	78	G 243	78	H 243

S 243	63	T 224	21	A 305	21	T 224	63	I 52	78	O 252	78	N 243

2 243	305	M 234	65	I 44	65	L 186	52	E 186	52	S 202

D8-1D

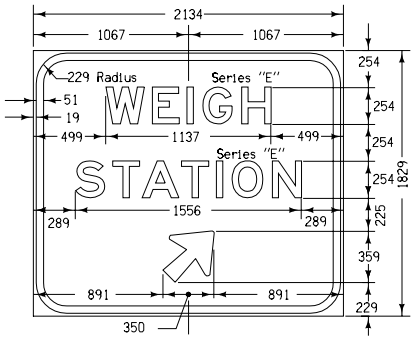

W 266	52	E 186	52	I 44	65	G 202	65	H 202

S 202	52	T 186	17	A 254	17	T 186	52	I 44	65	O 210	65	N 202

D8-3H

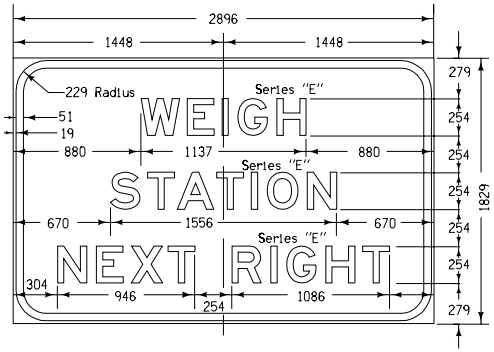

W 266	52	E 186	52	I 44	65	G 202	65	H 202

S 202	52	T 186	17	A 254	17	T 186	52	I 44	65	O 210	65	N 202

N 202	65	E 186	52	X 218	35	T 186

R 202	65	I 44	65	G 202	65	H 202	52	T 186

D8-2B

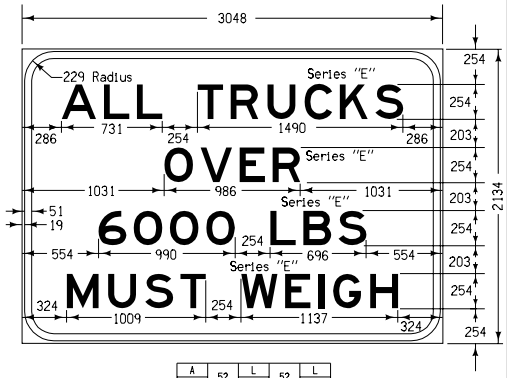

A 254	52	L 186	52	L 186

T 186	52	R 202	65	U 202	65	C 202	52	K 206	52	S 202

O 210	52	V 230	52	E 186	52	R 202		6 202	52	O 210	52	O 210	52	O 210

L 186	52	B 202	52	S 202

M 234	65	U 202	65	S 202	52	T 186

W 266	52	E 186	52	I 44	65	G 202	65	H 202

R13-2

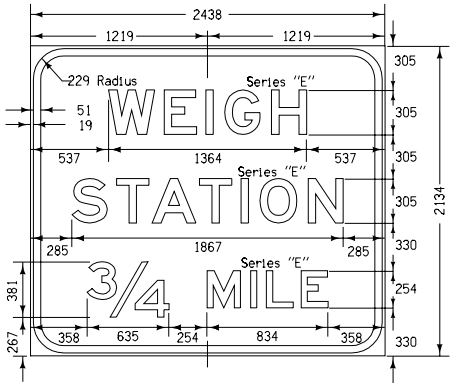

W 319	63	E 224	63	I 52	78	G 243	78	H 243

S 243	63	T 224	21	A 305	21	T 224	63	I 52	78	O 252	78	N 243

M 234	65	I 44	65	L 186	52	E 186

D8-1B

NOTES:

Letter width and interletter spacing:
As shown in the charts below the signs.
Dimensions are shown in millimeters.

Color -- Signs D8-1B, D8-1C, D8-1D, D8-2B, and D8-3H:
Letters, numerals, symbols and borders shall be smooth silver reflective sheeting.
Background shall be smooth green reflective sheeting.

– Sign R13-2:
Letters and border shall be black nonreflective sheeting.
Background shall be smooth silver reflective sheeting.

All dimensions given in millimeters unless noted.

M

METRIC VERSION

Iowa Department of Transportation

STANDARD ROAD PLAN

REVISION	
1	10-17-06

RD-52

SHEET 1 of 1

REVISIONS: Remove detachable copy information.

Deanna Maifield
APPROVED BY DESIGN METHODS ENGINEER

TYPE 'B' INTERSTATE
WEIGH STATION & REGULATORY SIGNS