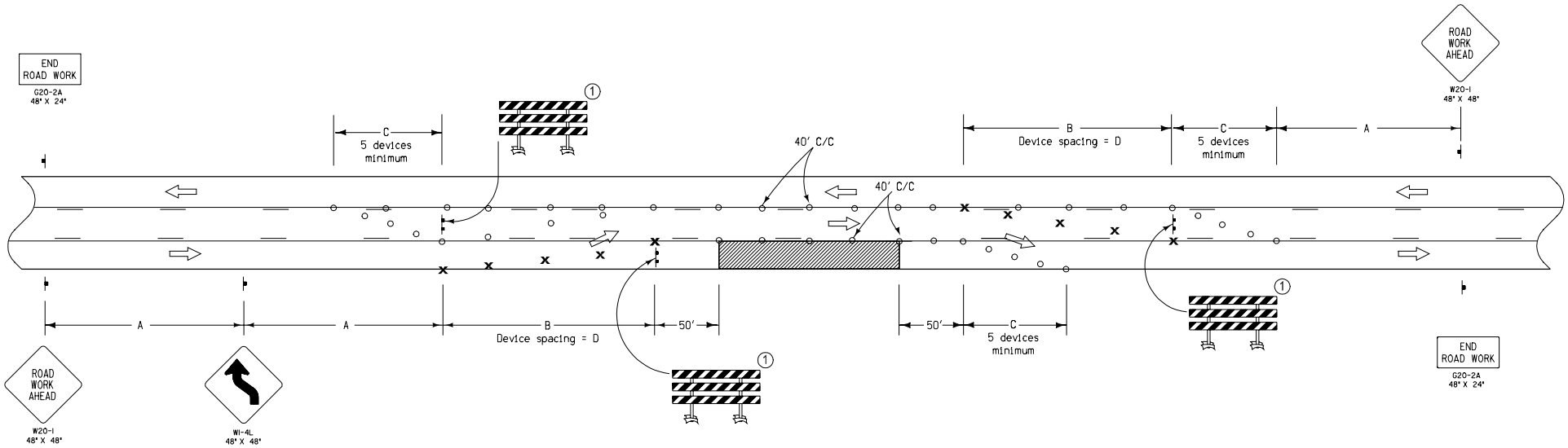

Contract Item:

Traffic Control

LEGEND

- ○ 42" Channelizer or Vertical Panel
- X Drum
- Traffic Sign
- Work Area
- Type III Barricade
- Direction of Traffic

SPEED LIMIT (mph)	A	B	C	D
25 or less	150'	100'	50'	25'
30 - 35	250'	140'	50'	35'
40 - 45	350'	270'	100'	45'
55 or greater	500'	330'	100'	55'

(1) A vehicle with an amber revolving light or amber strobe light may be substituted for the Type III Barricade.

Iowa Department of Transportation

STANDARD ROAD PLAN

REVISION	
NEW	10-17-06

TC-228

SHEET 1 of 1

REVISIONS: New.

Deanna Maifield

APPROVED BY DESIGN METHODS ENGINEER

LANE CLOSURE UTILIZING CONTINUOUS TWO WAY LEFT TURN LANE