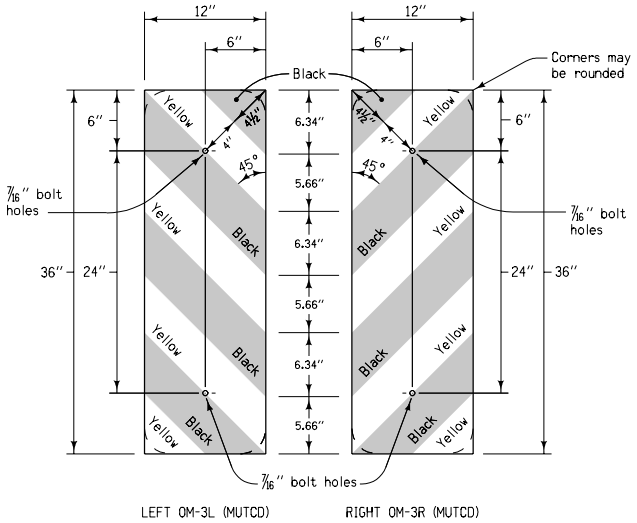

TYPE 3 OBJECT MARKER

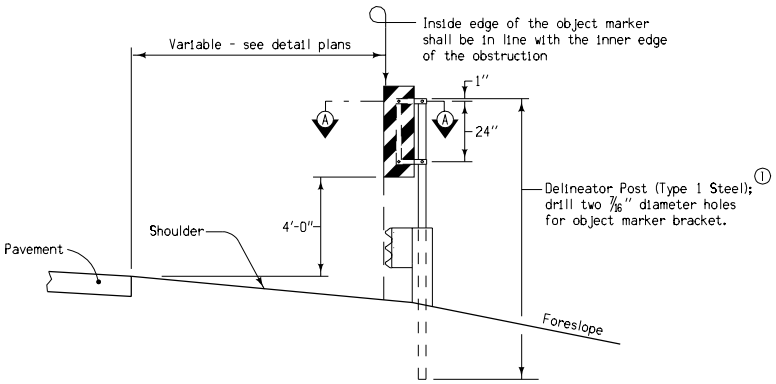

TYPICAL NON-CURBED SECTION
OFFSET INSTALLATION

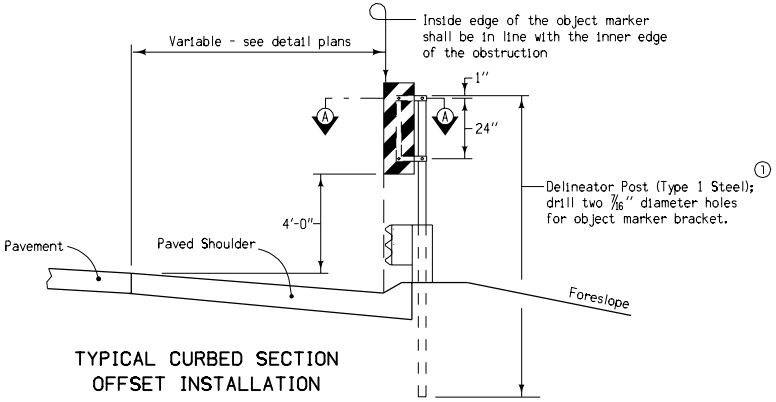

TYPICAL CURBED SECTION
OFFSET INSTALLATION

GENERAL NOTES:

Marker shall be fabricated with current specifications for signing materials (sign panels).

List of materials for the Type 3 Object Marker:

- Object Marker (OM-3L or OM-3R)
- Delineator Post (Length may very)
- Offset Bracket as detailed hereon
- (2) 3/8" x 1-1/2" long aluminum bolts
- (2) 3/8" x 2-1/4" long aluminum bolts
- (4) 3/8" aluminum hex self-locking nuts
- (2) Neoprene washers

① Post length shall be sufficient to provide a minimum 2'-6" of embedment when installed at the specified mounting height.

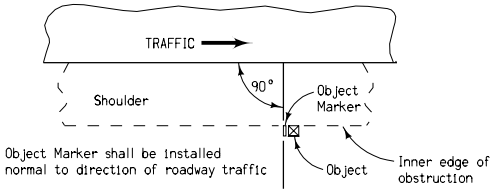

PLAN - TYPICAL INSTALLATION

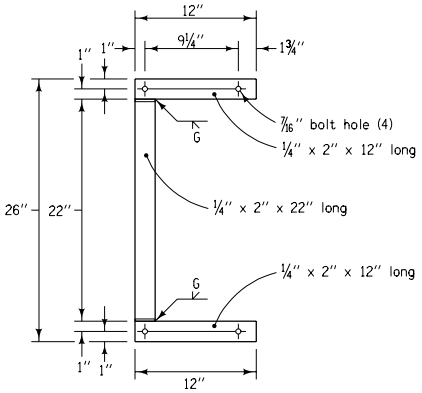

DETAIL OF
OFFSET BRACKET

Offset bracket shall be galvanized in compliance with AASHTO M 111

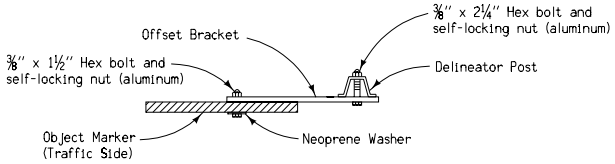

SECTION A-A

Iowa Department of Transportation
Highway Division

STANDARD ROAD PLAN | **RE-47**

REVISION: Remove Basis of Payment Information Already in the Specifications Book.	REVISION NO. 13
William J. Stein APPROVED BY DESIGN METHODS ENGINEER	REVISION DATE 10-19-04

DETAILS OF
TYPE 3 OBJECT MARKER