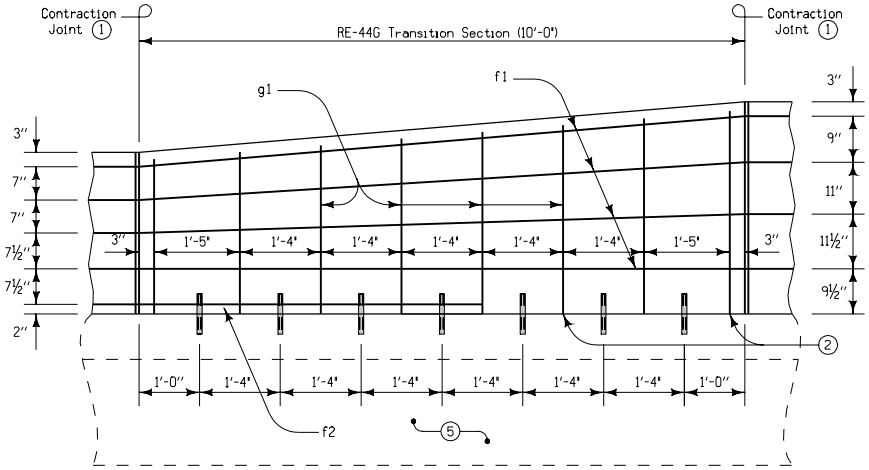

ELEVATION

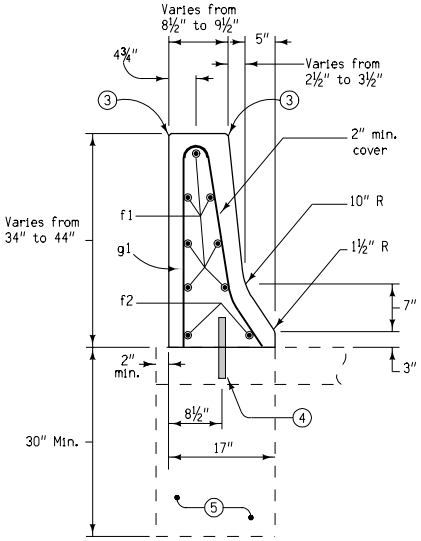

TYPICAL SECTION

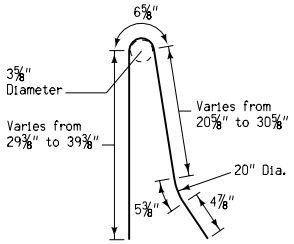

G1
BENT BAR DETAILS

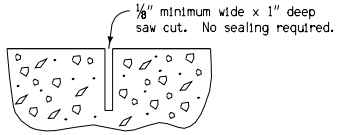

DETAILS OF CONTRACTION JOINT
Saw cut top and front face. Saw cut back if exposed.

CONCRETE QUANTITIES for one Transition Section
1.2 cy

REINFORCING BAR LIST
for one transition Section

Mark	Size	Number of Bars	Length	Mass (lbs.)
g1	5	8	*	53.5
f1	5	7	10'-0"	73.5
f2	5	2	5'-8"	11.8

* Varies from 7'-3" to 5'-7"

1. Contraction Joints shall be formed by use of pre-molded fiber, pressed wood or other approved material shaped to conform to shape of concrete barrier, or by sawing as indicated hereon. Where abutting sections are placed as separate pours, a butt joint may be used. Longitudinal reinforcement shall extend into the abutting section a minimum of 1'-6".
2. Barrier reinforcement shall be anchored to prevent movement. Each section shall be secured at the front, back, and at 3'-6" intervals. Method of anchorage shall be approved by the Engineer.
3. All exposed corners shall be filleted with a 3/4" dressed and beveled strip.
4. 1 inch diameter deformed bars of sufficient length to ensure 6 inch minimum embedment in rail and supporting surface. Bars shall be either installed in supporting surface when placed or installed in drilled holes using polymer grout or hydraulic cement grout.
5. Concrete footing required when not placed on concrete slab. If footings are required, excavation shall be to neat lines. The footings may be poured without the use of forms. The Contractor may, as an option, form the footings and backfill around the completed footing.

Contract Item:

Concrete Barrier, RE-44G or
Concrete Barrier, RE-44G and Footing

Tabulation: 108-18B

Iowa Department of Transportation

STANDARD ROAD PLAN

REVISION	
4	10-17-06

RE-44G

SHEET 1 of 1

REVISIONS: Complete redesign to bring current with other standards.

Deanna Maifield
APPROVED BY DESIGN METHODS ENGINEER

34" TO 44" CONCRETE BARRIER TRANSITION (HALF SECTION)