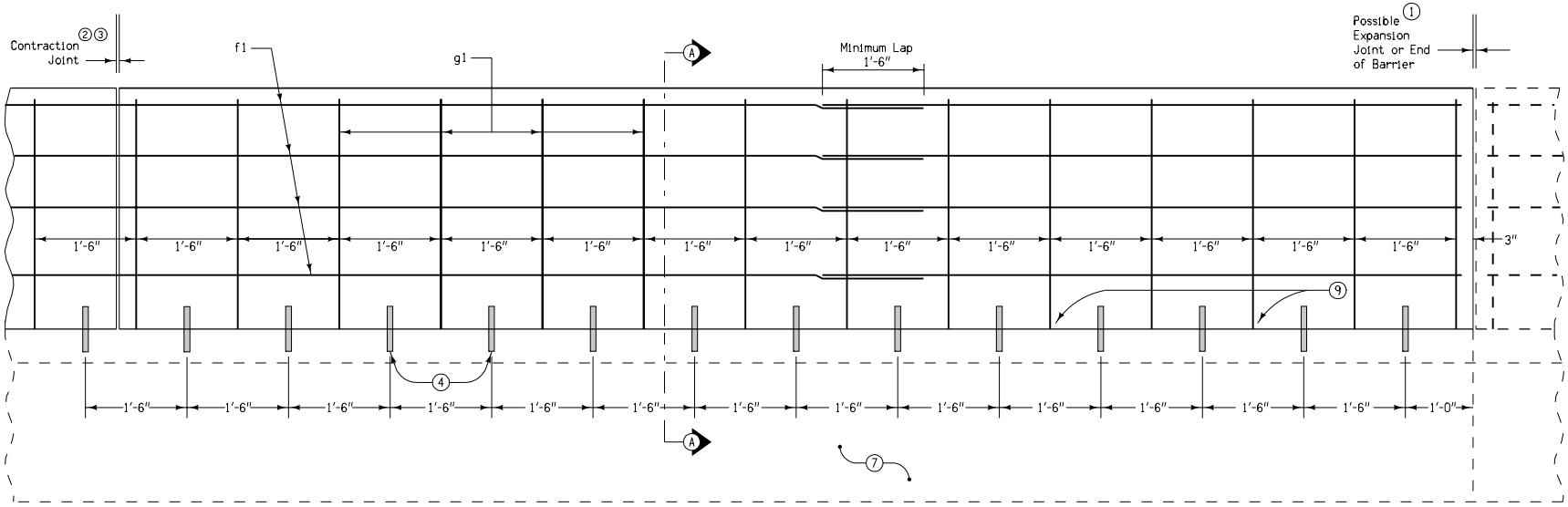

ELEVATION

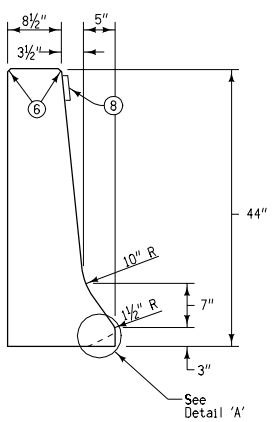

BARRIER FACE DETAILS

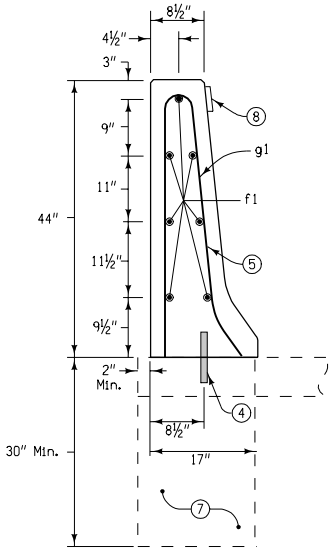

SECTION A-A

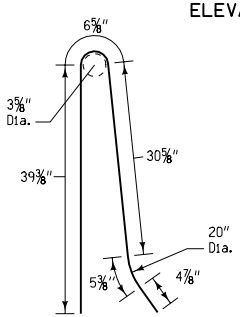

G1
BENT BAR DETAILS

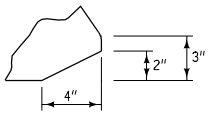

DETAIL 'A'
Special Shaping for Barrier over Intake

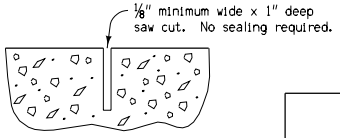

DETAILS OF CONTRACTION JOINT
Saw cut top and front face.
Saw cut back if exposed.

① Expansion Joints are necessary only where specifically required by project plans and the expansion material shall conform to shape of barrier. No sealer is required.

② Contraction Joints shall be sawed as indicated hereon. Where abutting sections are placed as separate pours, a butt joint may be used. Longitudinal reinforcement shall extend into the abutting section a minimum of 1'–6" (spanning the butt joint).

③ For barrier doweled to paved shoulders, match pavement joints. For free standing barrier with integral footings, use 20 foot maximum, 15 foot minimum joint spacing.

④ 1 inch diameter deformed bars of sufficient length to ensure 6 inch minimum embedment in rail and supporting surface. Bars shall be either installed in supporting surface when placed or installed in drilled holes using polymer grout or hydraulic cement grout.

⑤ Use minimum cover of 2 inches for rebars.

⑥ All exposed corners shall be filleted with a 3/4" dressed and beveled strip.

⑦ Concrete footing required when not placed on concrete slab. If footings are required, excavation shall be to neat lines. The footings may be poured without the use of forms. The Contractor may, as an option, form the footings and backfill around the completed footing.

⑧ Barrier markers to be spaced at 250 feet increments in areas with continuous lighting, 100 feet increments in areas with non–continuous lighting. Color shall be the same as adjacent edgeline.

⑨ Barrier reinforcement shall be anchored to prevent movement. Each section shall be secured at the front, back, and at 3'–6" intervals. Method of anchorage shall be approved by the Engineer.

Contract Item:

Concrete Barrier, RE-44C or
Concrete Barrier, RE-44C and Footing

Tabulation: 108-18B

CONCRETE QUANTITIES
Per Foot
0.11 cy

REINFORCING BAR LIST
Per Section (Approx. 20 feet)

Mark	Size	Number of Bars	Length	Mass (lbs.)
g1	5	14	7'-3"	106
f1	5	7	19'-6"	141

Iowa Department of Transportation

STANDARD ROAD PLAN

REVISION 8 10-17-06

RE-44C

SHEET 1 of 1

REVISIONS: Remove Materials I.M. references and show correct dimensions on Section A-A.

Deanna Maifield
APPROVED BY DESIGN METHODS ENGINEER

44" CONCRETE BARRIER
(HALF SECTION)