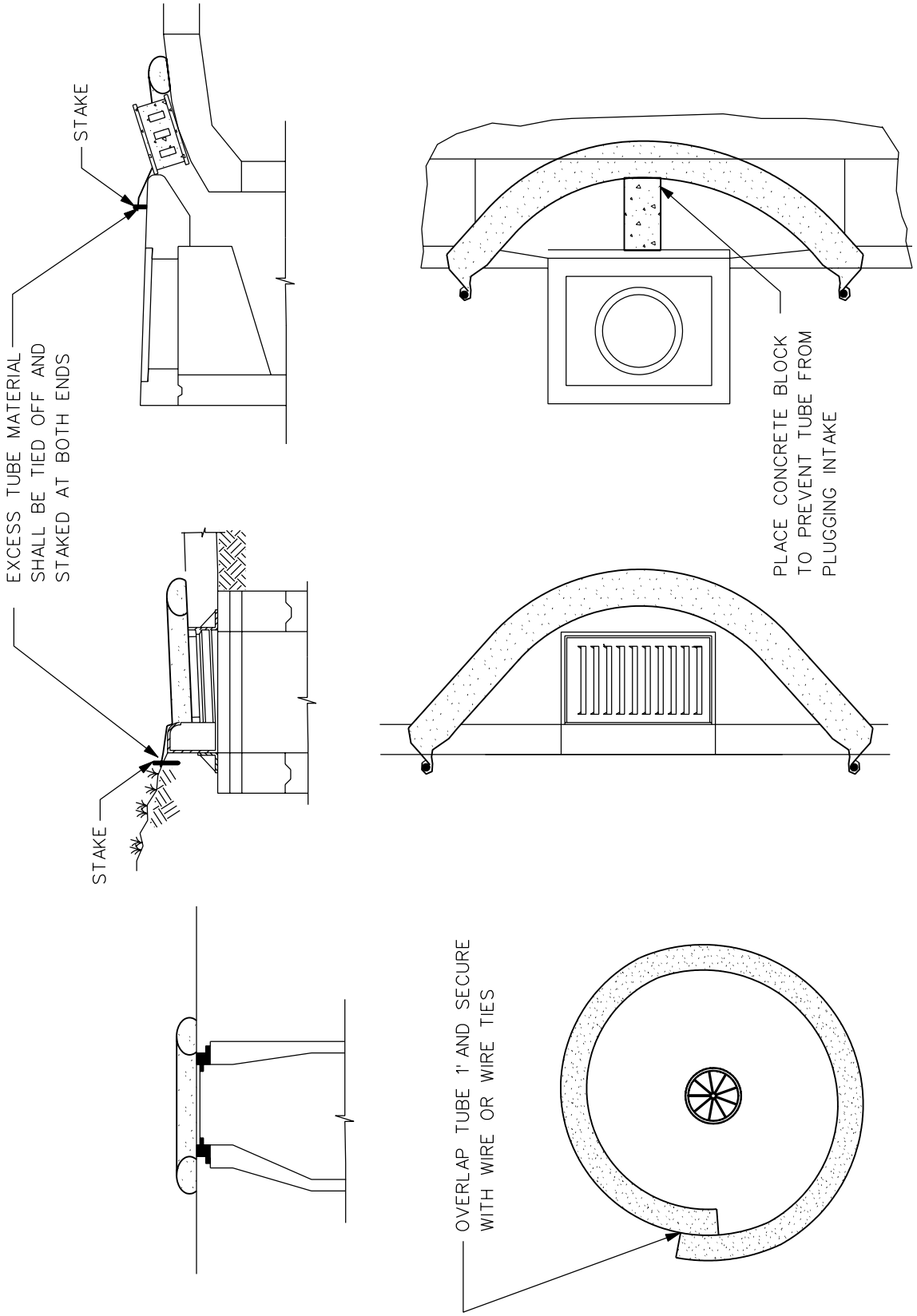

REV.	DATE	BY	FILTER TUBE FOR MANHOLES & INTAKES	FIGURE: 9040.10
DATE: 10-18-05				SHEET 1 OF 1