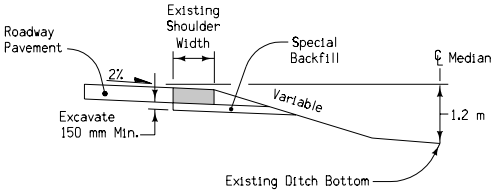


Section A-A

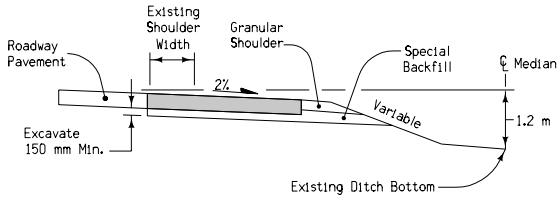


Section B-B

Pavement options: 230 mm PCC or 300 mm HMA

Contract Items:

- Detour Pavement
- Special Backfill
- Granular Shoulder
- Embankment In Place
- Excavation, Class 10, Roadway and Borrow
- Excavation, Class 13, Roadway and Borrow
- Removal of Pavement

Tabulation: 112-8

1. Match crossover pavement joints with existing roadway joints. 'CD' joints are required. See Standard Road Plan RH-50.
2. KT-2 Joint, bend bars out for new pavement only.
3. Median crossover is symmetrical at centerline.
4. Median pipe for crossover. See Detail Sheet 500-19.

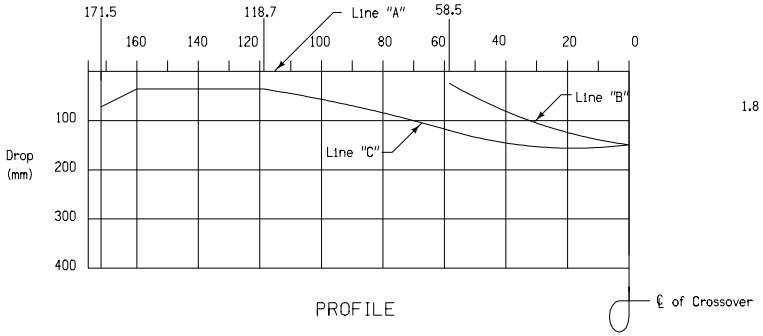


PROFILE

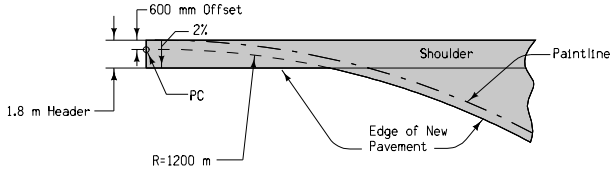


Detail 'A'

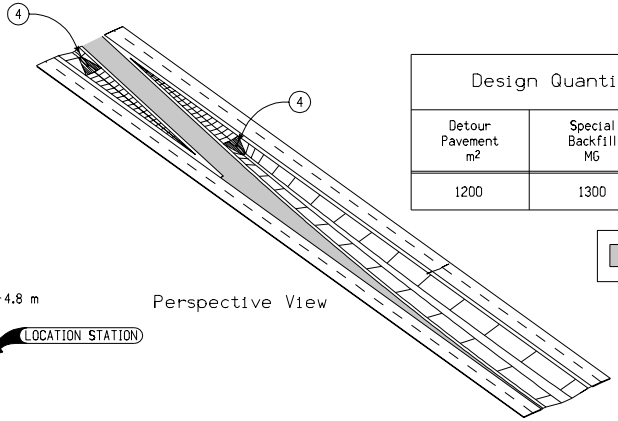


Perspective View

| Design Quantity Table | | |
|---|---|---|
| Detour Pavement $m^2$ | Special Backfill MG | Granular Shoulder MG |
| 1200 | 1300 | 130 |

Detour Pavement

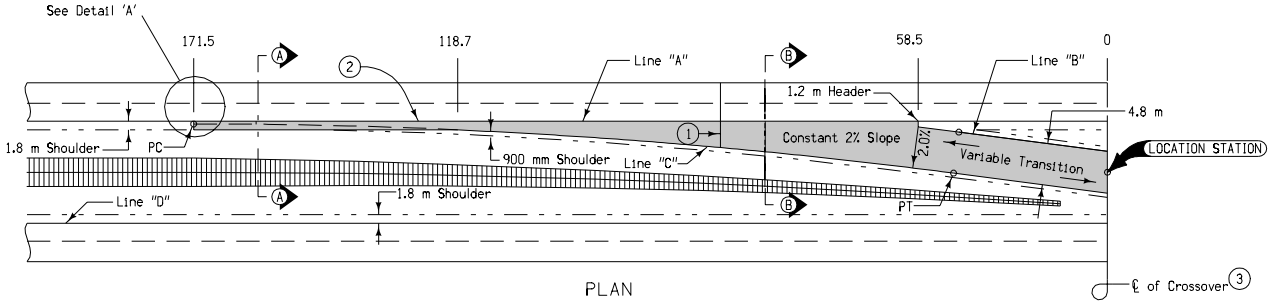


PLAN

All dimensions given in millimeters unless noted.

| Table Of Offsets And Drops | | | | | | | | | | | | | | | | | | | | | |
|---|---|---|---|---|---|---|---|---|---|---|---|---|---|---|---|---|---|---|---|---|---|
| Distance (m) | 171.5 | 170 | 160 | 150 | 140 | 130 | 120 | 118.7 | 110 | 100 | 90 | 80 | 70 | 60 | 58.5 | 50 | 40 | 30 | 20 | 10 | 0 |
| Offset A to C (m) | 1.8 | 1.8 | 1.8 | 1.8 | 1.8 | 1.8 | 1.8 | 1.8 | 2.22 | 2.79 | 3.43 | 4.16 | 4.98 | 5.88 | 6.02 | 6.86 | 7.93 | 9.08 | 10.32 | 11.58 | 12.81 |
| Drop A to C (mm) | 72 | 71 | 36 | 36 | 36 | 36 | 36 | 36 | 44.4 | 55.8 | 68.6 | 83.2 | 99.6 | 117.6 | 120.4 | 133.7 | 145.6 | 153.0 | 156.1 | 154.8 | 149.0 |
| Drop A to B (mm) | | | | | | | | | | | | | | | 24 | 52.37 | 81.1 | 105.0 | 124.3 | 138.9 | 149 |

M

METRIC VERSION

Iowa Department of Transportation
*Highway Division*

**STANDARD ROAD PLAN** **RV-14B**

REVISION: Remove "Crossover Pavement" label; note pavement thickness options.

| REVISION NO. | REVISION DATE |
|---|---|
| 1 | 10-18-05 |

William J. Stein
APPROVED BY DESIGN METHODS ENGINEER

MEDIAN CROSSOVER
(20.8 m MEDIAN)
4.8 m WIDE 1 LANE