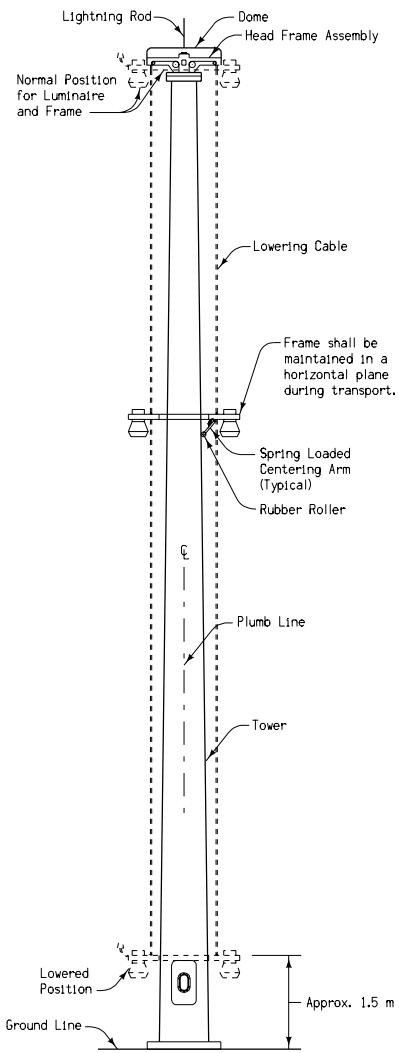

ELEVATION

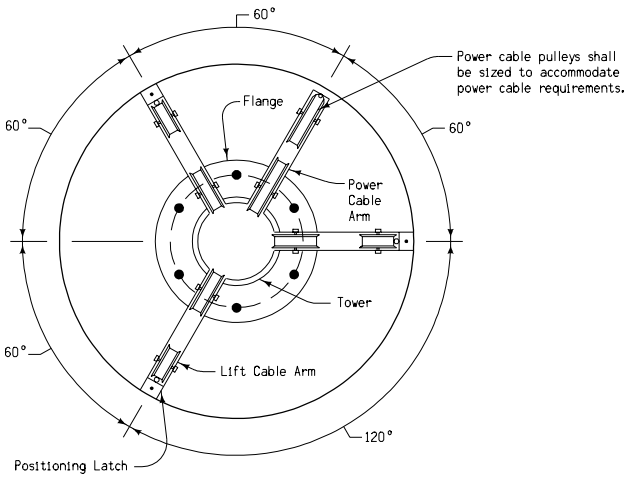

HEAD FRAME ASSEMBLY
(TYPICAL 3-CABLE DESIGN SHOWN)

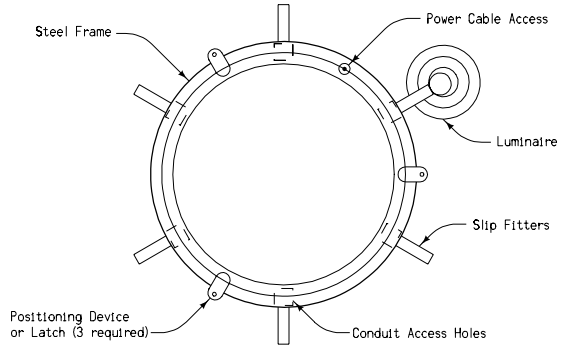

LUMINAIRE FRAME ASSEMBLY

All dimensions given in millimeters unless noted.

M

METRIC VERSION

Iowa Department of Transportation
Highway Division

STANDARD ROAD PLAN **RM-45**

REVISION: Revise notes covered in Specifications Book.

REVISION NO. 2

REVISION DATE 10-18-05

William J. Stein
APPROVED BY DESIGN METHODS ENGINEER

LOWERING DEVICE
(TOWER LIGHTING)