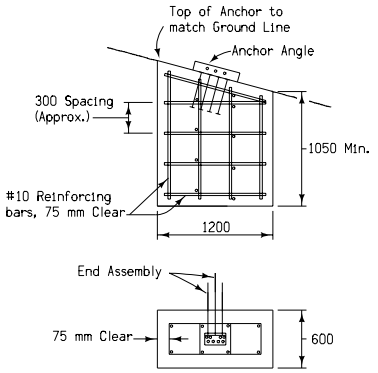

TYPE 'A' END ANCHORAGE DETAILS

Anchor shall be cast in place with ℄ normal to line of guardrail. Excavation for anchor shall be to the neat lines indicated. Forms will be allowed only for the ends (the 600 mm dimension) of the anchor.

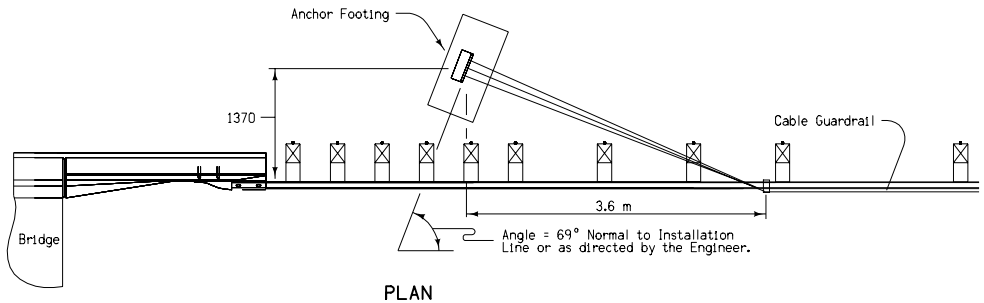

PLAN

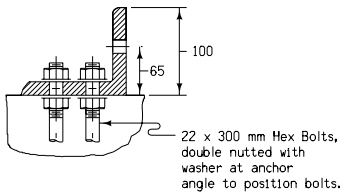

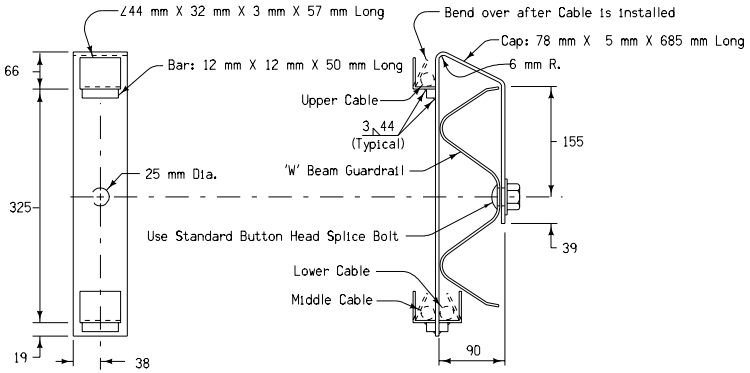

DETAILS OF TRANSITION BRACKET

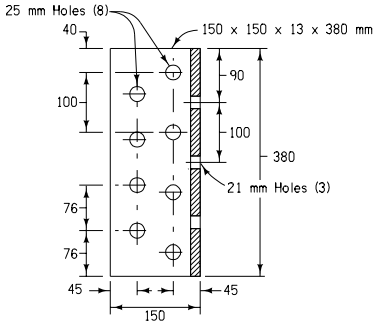

ANCHOR ANGLE

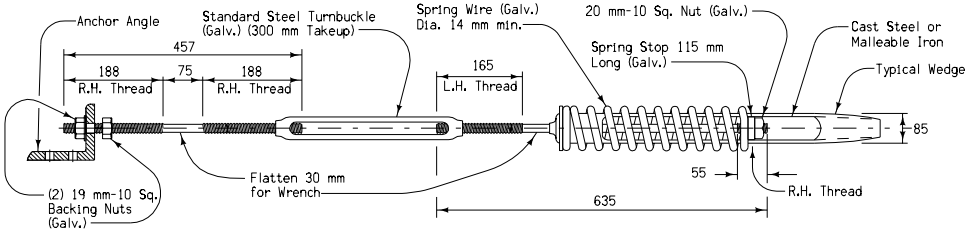

SPRING CABLE END ASSENBLY WITH TURNBUCKLE (Compensating Device)

CABLE TENSION ADJUSTMENTS FOR TEMPERATURE VARIATIONS														
Temperature Range Degrees F	120 to 110	109 to 100	99 to 90	89 to 80	79 to 70	69 to 60	59 to 50	49 to 40	39 to 30	29 to 20	19 to 10	9 to 0	-1 to -10	-11 to -20
Spring Compression millimeters *	25	32	39	44	50	57	64	69	75	82	89	95	100	108

* From the unloaded position in each spring

Turnbuckles shall be of the open type and shall each provide for a minimum takeup of 300 millimeters.

The spring type compensating device is installed to maintain cable tension for various temperature conditions. This device shall provide for 125 millimeters minimum travel and have a spring rate of 204±23 kgs. per inch. Turnbuckles are used to pretension each cable to the proper tension, depending on the temperature at the time of adjustment. The spring compression adjustments for various temperatures are listed in the table below.

Turnbuckles and compensating devices shall each be equipped with adequate and proper bolts and fittings (to provide for use separately or in combination) to connect the guardrail cable to the end anchorage. Turnbuckles and compensating devices will not be paid for separately but shall be considered incidental.

Steel used in the fabrication of the brackets shall conform to ASTM A36. The brackets shall be galvanized after fabrication according to ASTM A123.

Gas Metal-Arc and Flux-Cored Arc Welding may be used for welding incidental items as indicated on this sheet, provided that the fabricator furnishes certification for the filter metal and gas, uses filler metal on the approved list furnished by the Office of Materials, uses prequalified welding procedures, and uses qualified welders approved by the Iowa DOT.

List of materials for the RE-29A Type 'A' End Anchorage:

(1) Anchor Angle and Hardware
0.9 cubic meters concrete
26 kgs. of reinforcing steel (approx.)
(3) Cable End Assemblies
(2) Transition Brackets

All dimensions given in millimeters unless noted.

M

METRIC VERSION

Iowa Department of Transportation
Highway Division

STANDARD ROAD PLAN RE-84(2)

REVISION: NEW

REVISION NO. NEW

REVISION DATE 10-18-05

William G. Stein
APPROVED BY DESIGN METHODS ENGINEER

CABLE/W-BEAM GUARDRAIL CROSSOVER

(Sheet 2 of 2)