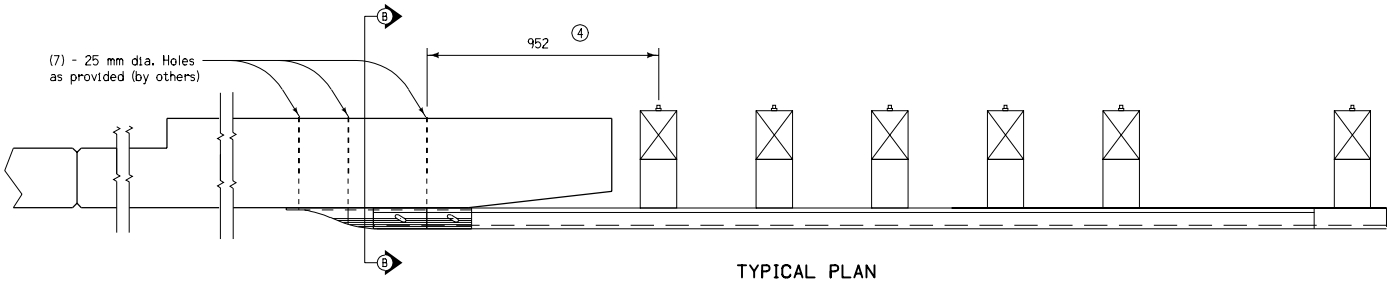


TYPICAL PLAN

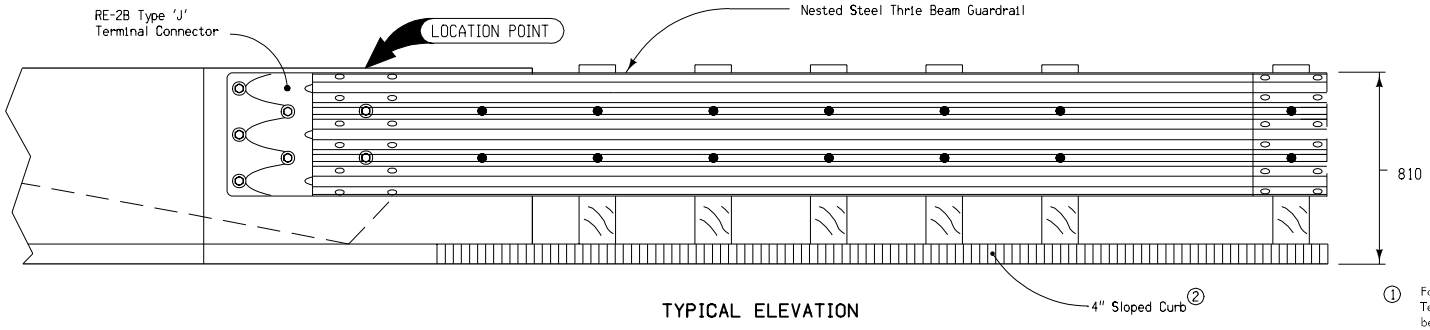


TYPICAL ELEVATION

GENERAL NOTES:

Contract Item:

Guardrail, End Anchorage, Beam, RE-69

List of Materials for the RE-69B End Anchorage:

(1) RE-28 Type 'J' Terminal Connector.
(7) Approved 22 mm dia. x Sufficient length Hex Bolts.
(7) Approved 22 mm dia. Hex Nuts.
(14) Approved Plain Washers, 24 mm dia. regular.

1. For attachments on the trailing end of a one-way bridge, the Type 'J' Terminal Connector should be lapped on the outside of the nested thrie beam rails.
2. See applicable Bridge Approach Section standards for specific requirements.
3. 22 mm anchor bolts shall be of sufficient length to leave a minimum of 2 thread widths outside of the nut.
4. First post and blockout shown on RE-68 is skipped.

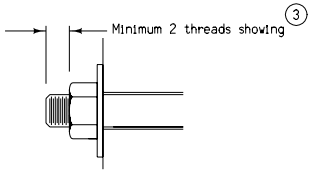


DETAIL "B"

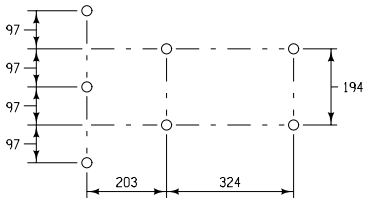


BOLT PATTERN

For RE-2B Type "J" Terminal Section

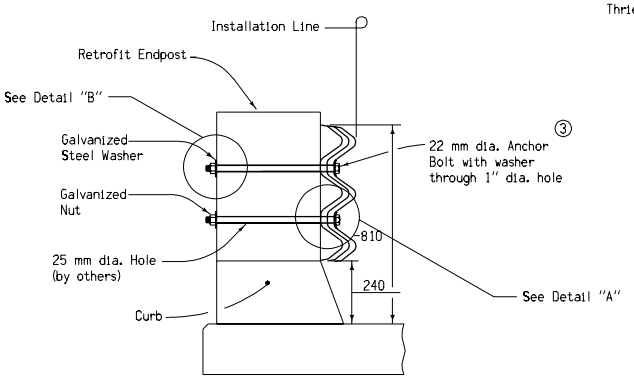


SECTION B-B

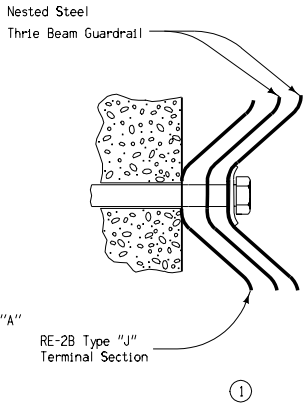


DETAIL "A" 1

All dimensions given in millimeters unless noted.

M

METRIC VERSION

Iowa Department of Transportation
*Highway Division*

**STANDARD ROAD PLAN** | **RE-69B**

| REVISION: Remove hardware information already in the Specifications Book; Clarify bolt hole locations. | REVISION NO. |
|---|---|
| | 5 |
| | REVISION DATE |
| William J. Stein | 10-19-04 |
| APPROVED BY DESIGN METHODS ENGINEER | |

GUARDRAIL INSTALLATION
CONNECTION TO
RETROFIT BRIDGE ENDPOST