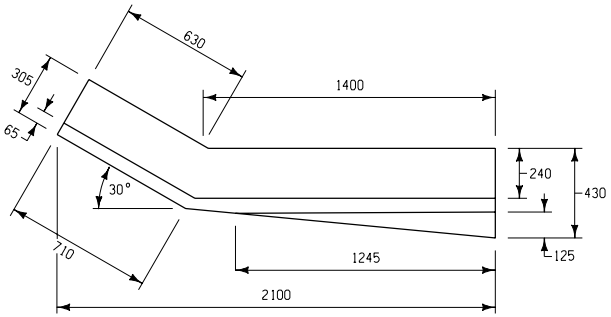

PLAN

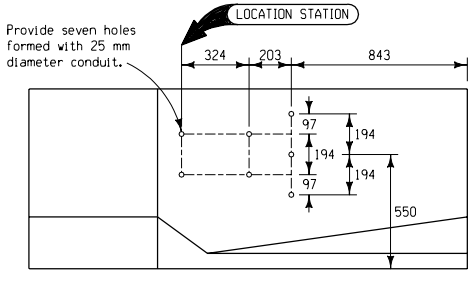

ELEVATION

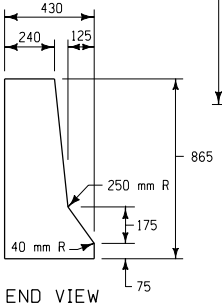

END VIEW

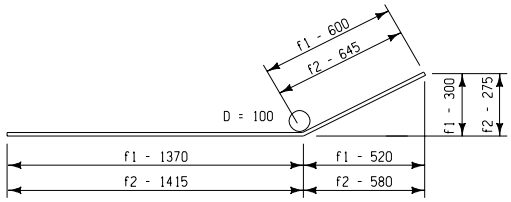

f1 - f2

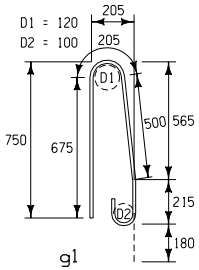

g1

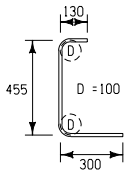

g2

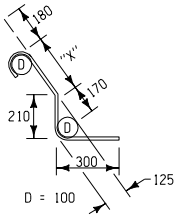

g3 - g8

Mark	"X"
g3	415
g4	370
g5	330
g6	285
g7	240
g8	210

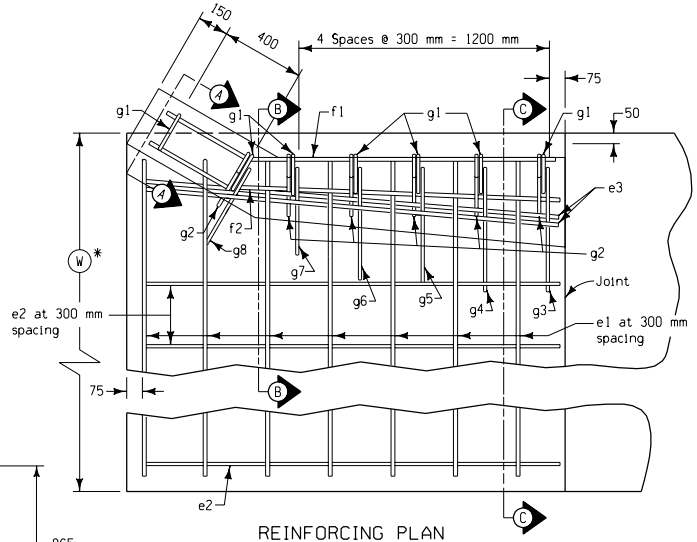

REINFORCING PLAN

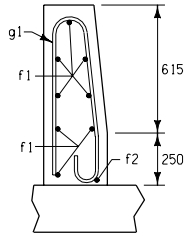

SECTION A-A

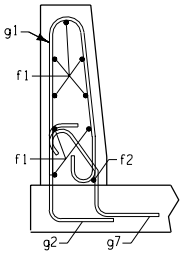

SECTION B-B

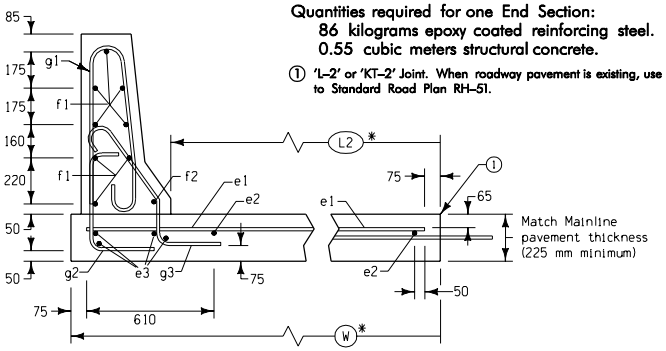

SECTION C-C

GENERAL NOTES:

Details shown hereon are for the construction of Reinforced Concrete End Section. The end section shall be cast in place. Details shown are typical. Alternate design details may be submitted to the Engineer for approval.

Materials and methods of construction shall be in accordance with current Standard and Supplemental Specifications.

Barrier shall be constructed as specified in Section 2513 of the current specifications. All exposed corners are to be filleted with a 20 millimeter dressed and beveled strip. Joints shall be cut in the barrier and shoulder to match transverse joints in the roadway. Refer to Standard Road Plans RH–50 and RH–52.

All reinforcing bars shall be epoxy coated and be grade 400. Minimum clear distance from face of concrete to the nearest reinforcing bar is to be 50 millimeters. Continuous reinforcing shall be required if constructed in conjunction with an adjoining cast–in–place unit.

The paved shoulder area shall be included in the quantity for concrete pavement, shoulder or median, whichever is applicable. This shall include reinforcement bars e1, e2, e3, g2,g3, g4, g5, g6, g7, and g8.

The price bid for "Barrier, Concrete RE–44H" shall be considered full compensation for construction of the end section as detailed hereon, including reinforcing steel bars g1, f1 and f2.

For paved shoulder construction dimensions and quantities, refer to Standard Road Plan RE–44F(2).

Quantities required for one End Section:
86 kilograms epoxy coated reinforcing steel.
0.55 cubic meters structural concrete.

① 'L–2' or 'KT–2' Joint. When roadway pavement is existing, use 'BT–3' Joint. Refer to Standard Road Plan RH–51.

All dimensions given in millimeters unless noted.

EPOXY REINFORCING STEEL

MARK	SIZE	LOCATION	SHAPE	NO.	LENGTH
e1	20	Shoulder Pave. Trans.		7	*
e2	15	Shoulder Pave. Long.		*	2000
e3	15	Shoulder Pave. Long.		4	2000
f1	20	Longitudinal		8	1970
f2	20	Longitudinal		1	2060
g1	15	Vertical		7	1775
g2	15	Vertical		6	885
g3-8	15	Vertical		6	Varies

* For specified shoulder width and reinforcement length and number see Standard Road Plan RE-44F(2).

M

Iowa Department of Transportation
Project Development Division

STANDARD ROAD PLAN **RE–44H**

METRIC VERSION

REVISION: Add g2 and g3 reinforcing bars to shoulder quantities and remove from concrete barrier quantities.

REVISION NO. 3

REVISION DATE 09-21-99

05-24-99
APPROVED BY DESIGN METHODS ENGINEER

REINFORCED CONCRETE END SECTION