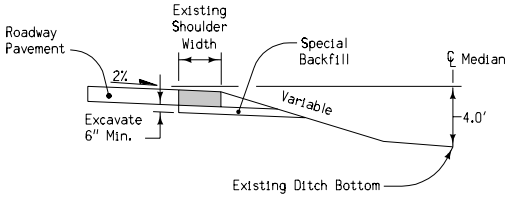

Section A-A

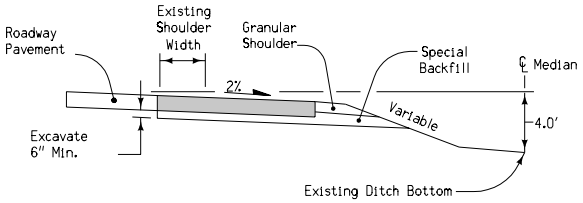

Section B-B

Pavement options: 9" PCC or 12" HMA

Contract Items:

- Detour Pavement
- Special Backfill
- Granular Shoulder
- Embankment In Place
- Excavation, Class 10, Roadway and Borrow
- Excavation, Class 13, Roadway and Borrow
- Removal of Pavement

Tabulation: 112-8

1. Match crossover pavement joints with existing roadway joints. 'CD' joints are required. See Standard Road Plan RH-50.
2. KT-2 Joint, bend bars out for new pavement only.
3. Median crossover is symmetrical at centerline.
4. Median pipe for crossover. See Detail 500-19.

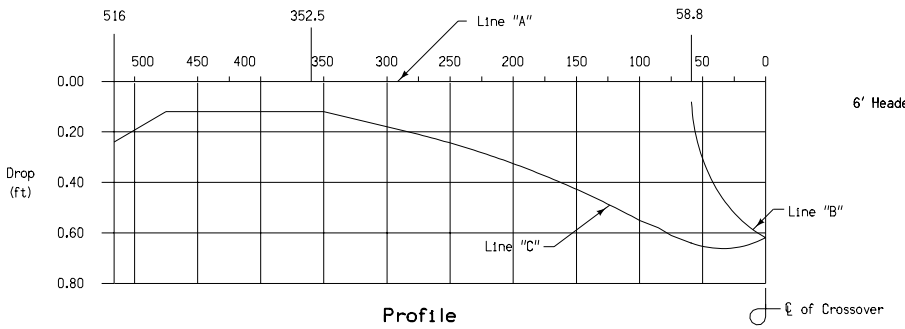

Profile

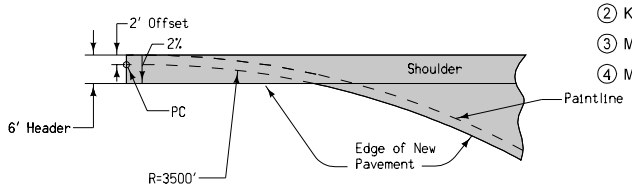

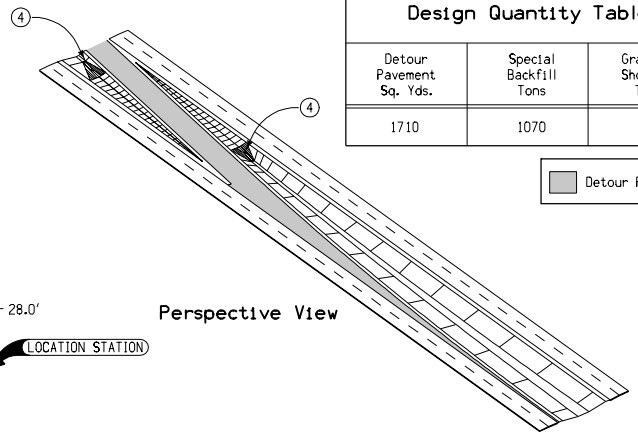

Perspective View

Design Quantity Table		
Detour Pavement Sq. Yds.	Special Backfill Tons	Granular Shoulder Tons
1710	1070	106

Detour Pavement

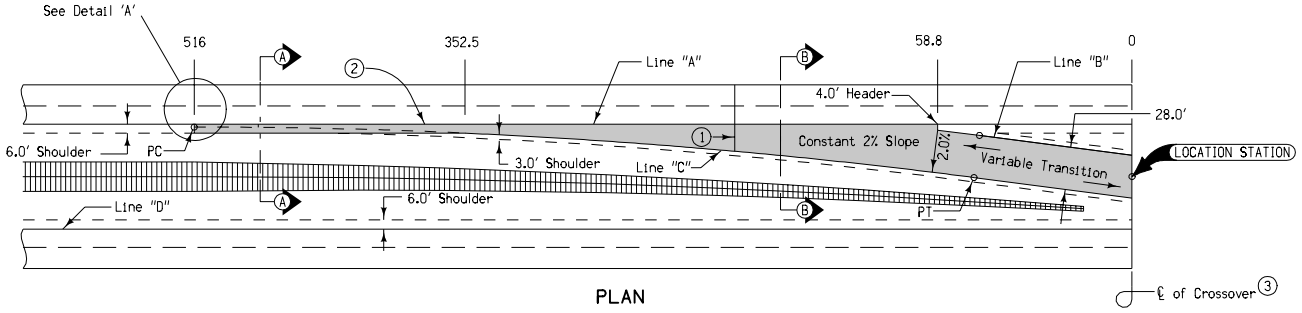

PLAN

Table Of Offsets And Drops																							
Distance (Feet)	516	500	450	400	352.5	350	325	300	275	250	225	250	225	200	175	150	125	100	75	58.8	50	25	0
Offset A to C (Feet)	6.00	6.00	6.00	6.00	6.00	6.12	7.43	8.91	10.57	12.42	13.84	15.99	14.44	16.64	19.03	21.59	24.34	27.27	30.29	32.19	33.23	36.16	39.10
Drop A to C (Feet)	0.24	0.19	0.12	0.12	0.12	0.12	0.15	0.18	0.21	0.25	0.28	0.32	0.29	0.33	0.38	0.43	0.49	0.55	0.61	0.64	0.65	0.66	0.62
Drop A to B (Feet)																				0.08	0.31	0.52	0.62

Iowa Department of Transportation
Highway Division

STANDARD ROAD PLAN | **RV-12C**

REVISION: Remove "Crossover Pavement" label; note pavement thickness options.

REVISION NO. 1

REVISION DATE 10-18-05

APPROVED BY DESIGN METHODS ENGINEER

MEDIAN CROSSOVER
(50' MEDIAN)
28' WIDE 2 LANE