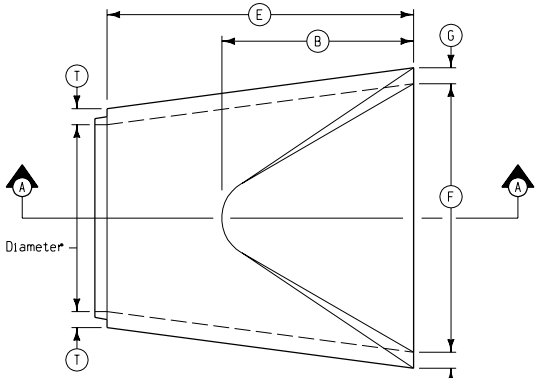

(TYPE 1 APRON)
TYPICAL PLAN VIEW

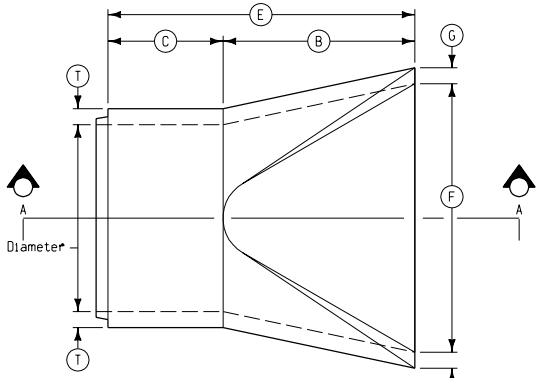

(TYPE 2 APRON)
TYPICAL PLAN VIEW

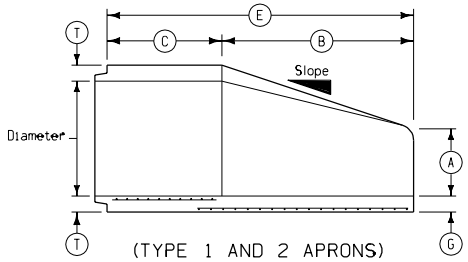

(TYPE 1 AND 2 APRONS)
TYPICAL SECTION A-A
TONGUE END DETAIL ①

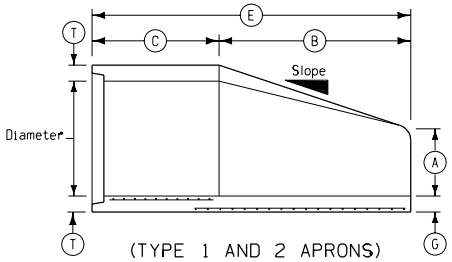

(TYPE 1 AND 2 APRONS)
TYPICAL SECTION A-A
GROOVE END DETAIL ①

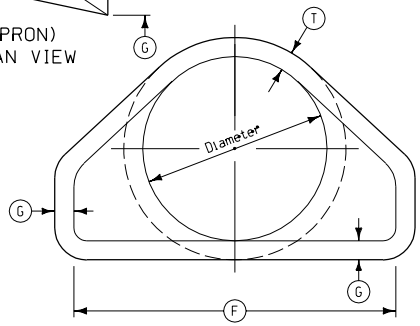

(TYPE 1 AND TYPE 2 APRONS)
TYPICAL END VIEW

GENERAL NOTES:

Details on this sheet indicate typical requirements and general installation requirements for Concrete Culvert Pipe Aprons (flared end sections). Design of the barrel portion of aprons shall conform to, or exceed, the requirements for 2000 D pipe except where 1500 D pipe is required, aprons meeting the same requirements may be furnished. Reinforcement of the flared portion of apron shall be as indicated or as otherwise approved by the Engineer.

Materials and methods of construction shall be in accordance with current Standard and Supplemental Specifications.

Fabrication of pipe aprons shall conform to requirements of current Specifications for "Concrete Culvert Pipe". Dimension 'E' shown is minimum and shall be considered the design length. Any difference between the actual length of concrete apron installed and the length indicated hereon shall be appropriately adjusted for in the length of concrete culvert pipe furnished.

Tie bolts and bolt holes are necessary only when specifically required in detail project plans.

Structural concrete used for concrete aprons shall contain air entrainment in accordance with Article 2403.03 Paragraph B of the current Standard Specifications.

Alternate designs for concrete pipe aprons may be submitted for approval. Welded wire fabric shall meet the requirements of A.S.T.M. A-185.

Refer to appropriate other Standard Road Plans as well as project plans for additional details of individual culvert installations.

Reinforcing shown for barrel portion is typical. Refer to Standard Road Plan RF-1 for additional requirements.

Price bid for "Concrete Pipe Aprons", of the size specified shall be considered full compensation for fabrication and installation of concrete aprons as detailed hereon.

① Tongue end used on inlet end section. Groove end used on outlet end section. Dimensions for tongue and groove connections shall be as indicated on Standard Road Plan RF-1.

TABLE OF TYPE 1 APRON DIMENSIONS

DIAM.	SLOPE	A	B	MINIMUM C	MINIMUM E	F	G	T
12"	2.4:1	4"	2'-0"	4'-7/8"	6'-7/8"	2'-0"	2"	2"
15"	2.4:1	6"	2'-3"	3'-10"	6'-1"	2'-6"	2 1/4"	2 1/4"
18"	2.3:1	9"	2'-3"	3'-10"	6'-1"	3'-0"	2 1/2"	2 1/2"
21"	2.4:1	9"	3'-0 "	3'-1 1/2"	6'-1 1/2"	3'-5"	3"	3"
24"	2.5:1	9 1/2"	3'-7 1/2"	2'-6"	6'-1 1/2"	4'-0"	3"	3"
27"	2.5:1	10 1/2"	4'-1 "	2'-0"	6'-1 1/2"	4'-4"	3 1/2"	3 1/2"
30"	2.5:1	12"	4'-6"	1'-7 3/4"	6'-1 3/4"	5'-0"	3 1/2"	3 1/2"
36"	2.5:1	15"	5'-3"	2'-9"	8'-0"	6'-0"	4"	4"
42"	2.5:1	21"	5'-3"	2'-9"	8'-0"	6'-6"	4 1/2"	4 1/2"
48"	2.5:1	24"	6'-0"	2'-0"	8'-0"	7'-0"	5"	5"
54"	1.8:1	27"	5'-0"	3'-0"	8'-0"	7'-6"	5 1/2"	5 1/2"
60"	1.6:1	29 1/2"	5'-0"	3'-0"	8'-0"	8'-0"	5 1/2"	6"
66"	1.7:1	30"	6'-0"	2'-3"	8'-3"	8'-0"	5 1/2"	6"
72"	1.6:1	30"	6'-6"	1'-9"	8'-3"	9'-0"	6"	7"
78"	1.8:1	36"	7'-6"	1'-9"	9'-3"	9'-6"	6 1/2"	7 1/2"
84"	1.3:1	29 1/2"	6'-9"	2'-6 1/2"	9'-3 1/2"	10'-0"	6 1/2"	8"

TABLE OF TYPE 2 APRON DIMENSIONS

DIAM.	SLOPE	A	B	MINIMUM C	MINIMUM E	F	G	T
12"	2.4:1	4"	2'-0"	4'-7/8"	6'-7/8"	2'-0"	2"	2"
15"	2.4:1	6"	2'-3"	3'-10"	6'-1"	2'-6"	2 1/4"	2 1/4"
18"	2.3:1	9"	2'-3"	3'-10"	6'-1"	3'-0"	2 1/2"	2 1/2"
21"	2.4:1	9"	3'-0"	3'-1 1/2"	6'-1 1/2"	3'-5"	3"	3"
24"	2.5:1	9 1/2"	3'-7 1/2"	2'-6"	6'-1 1/2"	4'-0"	3"	3"
27"	2.5:1	10 1/2"	4'-1 "	2'-0"	6'-1 1/2"	4'-4"	3 1/2"	3 1/2"
30"	2.5:1	12"	4'-6"	1'-7 3/4"	6'-1 3/4"	5'-0"	3 1/2"	3 1/2"
36"	2.5:1	15"	5'-3"	2'-9"	8'-0"	6'-0"	4"	4"
42"	2.5:1	21"	5'-3"	2'-9"	8'-0"	6'-6"	4 1/2"	4 1/2"
48"	2.5:1	24"	6'-0"	2'-0"	8'-0"	7'-0"	5"	5"
54"	1.9:1	24 1/2"	5'-5"	2'-7"	8'-0"	7'-6"	5 1/2"	5 1/2"
60"	1.4:1	24 1/2"	5'-0"	3'-0"	8'-0"	8'-0"	5 1/2"	6"
66"	1.7:1	30"	6'-0"	2'-3"	8'-3"	8'-0"	5 1/2"	6"
72"	1.4:1	24"	6'-6"	1'-9"	8'-3"	9'-0"	6"	7"
78"	1.8:1	36"	7'-6"	1'-9"	9'-3"	9'-6"	6 1/2"	7 1/2"
84"	1.5:1	23 1/2"	7'-6 1/2"	1'-9"	9'-3 1/2"	10'-0"	6 1/2"	8"

Iowa Department of Transportation
Project Development Division

STANDARD ROAD PLAN **RF-3**

REVISION: Added 21" and 27" to apron dimensions

REVISION NO. 6

REVISION DATE 10-03-00

06-07-00
APPROVED BY DESIGN METHODS ENGINEER

CONCRETE PIPE APRONS
(FLARED END SECTIONS)