ESTIMATE OF QUANTITIES - FLUME BELL JOINTS

MARK	SIZE	LOCATION	SHAPE	NO.	LENGTH	WEIGHT	NO.	LENGTH	WEIGHT	NO.	LENGTH	WEIGHT	NO.	LENGTH	WEIGHT	NO.	LENGTH	WEIGHT
JUNCTION BELL JOINT				6′ x 3′			6′ x 4′			6′ x 5′			6′ x 6′			6′ x 8′		
x1	6	WALLS & FLOOR		4	20′-0	83	4	17′-8	74	4	17′-8	74	4	17′-8	74	4	17′-10	74
x3	6	WALLS VERT.		---	-----	----	8	4′-4	36	8	5′-4	45	8	6′-4	53	8	8′-4	70
y1	6	WALLS HORIZ.		10	6′-2	64	12	6′-2	77	14	6′-2	90	16	6′-2	103	20	6′-3	130
y2	6	FLOOR VERT.		8	7′-9	65	8	7′-9	65	8	7′-9	65	8	7′-9	65	8	7′-9	65
z1	6	FLOOR VERT.		8	3′-5	29	8	3′-5	29	8	3′-5	29	8	3′-5	29	8	3′-5	29
TOTAL REINFORCING STEEL				241 LBS.			281 LBS.			303 LBS.			324 LBS.			368 LBS.		
TOTAL CONCRETE				2.0 CU. YDS.			2.1 CU. YDS.			2.3 CU. YDS.			2.5 CU. YDS.			2.9 CU. YDS.		
CHUTE BELL JOINT				6′ x 3′			6′ x 4′			6′ x 5′			6′ x 6′			6′ x 8′		
x2	6	WALLS & FLOOR		4	17′-0	71	4	18′-5	77	4	20′-0	83	4	17′-8	74	4	17′-10	74
x4	6	WALLS VERT.		---	-----	----	---	-----	----	---	-----	----	8	4′-0	33	8	5′-6	46
y3	6	WALLS HORIZ.		8	6′-2	51	8	6′-2	51	10	6′-2	64	12	6′-2	77	14	6′-3	91
y4	6	FLOOR VERT.		8	7′-8	64	8	7′-8	64	8	7′-8	64	8	7′-8	64	8	7′-8	64
z1	6	FLOOR VERT.		8	3′-5	29	8	3′-5	29	8	3′-5	29	8	3′-5	29	8	3′-5	29
TOTAL REINFORCING STEEL				215 LBS.			221 LBS.			240 LBS.			277 LBS.			304 LBS.		
TOTAL CONCRETE				1.7 CU. YDS.			1.8 CU. YDS.			1.9 CU. YDS.			2.1 CU. YDS.			2.4 CU. YDS.		

MARK	NO.	LENGTH	WEIGHT	NO.	LENGTH	WEIGHT	NO.	LENGTH	WEIGHT	NO.	LENGTH	WEIGHT	NO.	LENGTH	WEIGHT	MARK
JUNCTION BELL JOINT	8′ x 4′			8′ x 5′			8′ x 6′			8′ x 8′			8′ x 10′			
x1	4	19′-8	82	4	19′-8	82	4	19′-8	82	4	19′-10	83	4	19′-10	83	x1
x3	8	4′-4	36	8	5′-4	45	8	6′-4	53	8	8′-4	70	8	10′-4	86	x3
y1	12	6′-2	77	14	6′-2	90	16	6′-2	103	20	6′-3	130	24	6′-3	156	y1
y2	10	7′-9	81	10	7′-9	81	10	7′-9	81	10	7′-9	81	10	7′-9	81	y2
z1	10	3′-5	36	10	3′-5	36	10	3′-5	36	10	3′-5	36	10	3′-5	36	z1
TOTAL REINFORCING STEEL	312 LBS.			334 LBS.			355 LBS.			400 LBS.			442 LBS.			
TOTAL CONCRETE	2.4 CU. YDS.			2.6 CU. YDS.			2.8 CU. YDS.			3.1 CU. YDS.			3.5 CU. YDS.			
CHUTE BELL JOINT	8′ x 4′			8′ x 5′			8′ x 6′			8′ x 8′			8′ x 10′			
x2	4	20′-5	85	4	22′-0	92	4	19′-8	82	4	19′-10	83	4	19′-10	83	x2
x4	---	-----	----	---	-----	----	8	4′-0	33	8	5′-6	46	8	7′-0	58	x4
y3	8	6′-2	51	10	6′-2	64	12	6′-2	77	14	6′-3	91	18	6′-3	117	y3
y4	10	7′-8	80	10	7′-8	80	10	7′-8	80	10	7′-8	80	10	7′-8	80	y4
z1	10	3′-5	36	10	3′-5	36	10	3′-5	36	10	3′-5	36	10	3′-5	36	z1
TOTAL REINFORCING STEEL	252 LBS.			272 LBS.			308 LBS.			336 LBS.			374 LBS.			
TOTAL CONCRETE	2.0 CU. YDS.			2.2 CU. YDS.			2.3 CU. YDS.			2.6 CU. YDS.			2.9 CU. YDS.			

CONCRETE PLACEMENT

S x H	JUNCTION BELL		CHUTE BELL	
	FOOTING	WALLS	FOOTING	WALLS
6′ x 3′	1.3	0.6	1.3	0.4
6′ x 4′	1.3	0.8	1.3	0.5
6′ x 5′	1.3	1.0	1.3	0.6
6′ x 6′	1.3	1.2	1.3	0.8
6′ x 8′	1.3	1.6	1.3	1.0
8′ x 4′	1.5	0.8	1.5	0.5
8′ x 5′	1.5	1.0	1.5	0.6
8′ x 6′	1.5	1.2	1.5	0.8
8′ x 8′	1.6	1.6	1.6	1.0
8′ x 10′	1.6	1.9	1.6	1.3

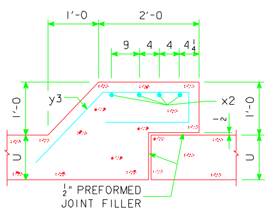

CHUTE WALLS

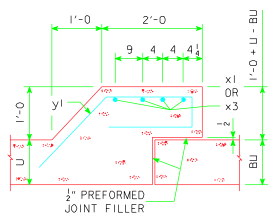

JUNCTION WALLS

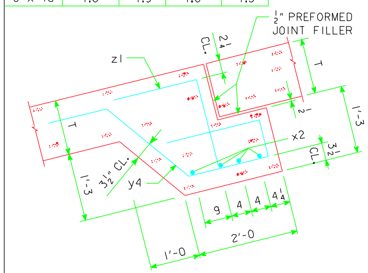

CHUTE FOOTING

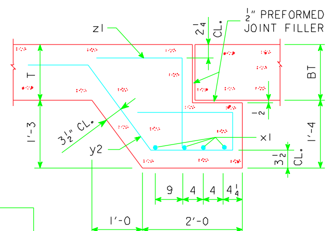

JUNCTION FOOTING

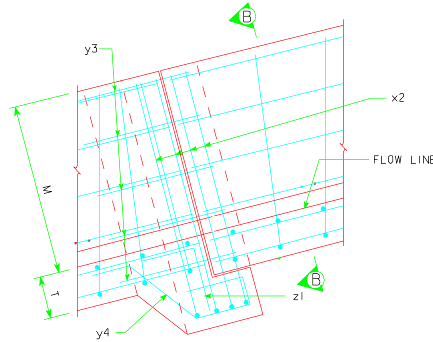

PART ELEVATION - CHUTE BELL JT.

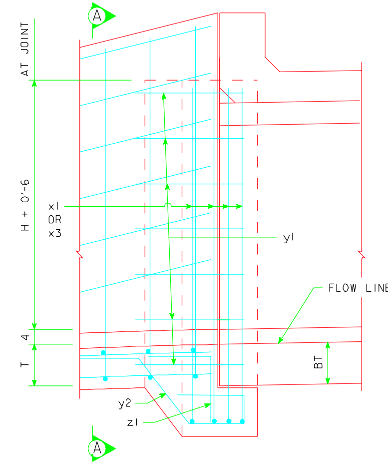

PART ELEV. - JUNCTION BELL JT.

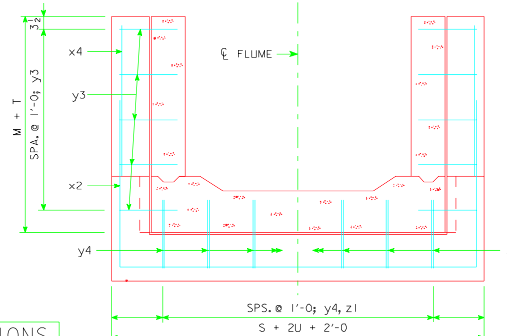

SECTION B-B

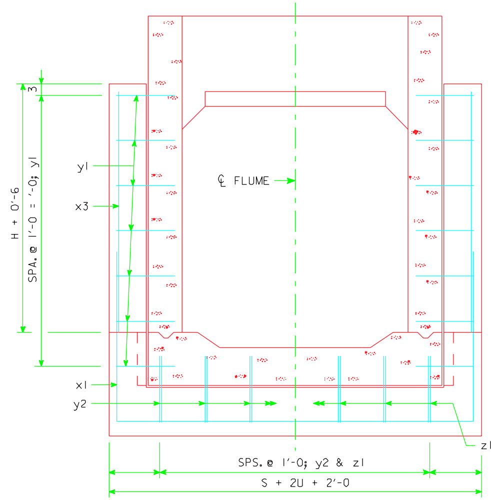

SECTION A-A

S = CULVERT SPAN
H = CULVERT HEIGHT

BENT BAR DETAILS

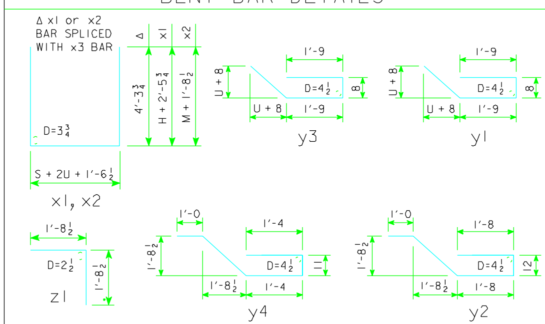

NOTE: ALL DIMENSIONS ARE OUT TO OUT.
D = PIN DIAMETER

BARREL & CHUTE DIMENSIONS

S x H	M	T	U	BT	BU
6′ x 3′	2′-3	11	9	10	9
6′ x 4′	3′-0	11	9	10	9
6′ x 5′	3′-9	11	9	10	9
6′ x 6′	4′-6	11	9	10	9
6′ x 8′	6′-0	11	10	10	9
8′ x 4′	3′-0	11	9	10	9
8′ x 5′	3′-9	11	9	10	9
8′ x 6′	4′-6	11	9	10	9
8′ x 8′	6′-0	11	10	10	9
8′ x 10′	7′-6	11	10	10	9

NOTES:

1. DIMENSIONS AND QUANTITIES SHOWN BASED ON 'U' FLUME WALLS, 'BU' BARREL WALLS, 'T' FLUME FLOOR AND 'BT' BARREL FLOOR THICKNESSES.
2. CHANGE LENGTHS OF BARS x1 AND ADJUST REINFORCING STEEL AND CONCRETE QUANTITIES ACCORDINGLY OTHER THAN WALL AND FLOOR THICKNESSES SHOWN.
3. FLOOR BARS m1 ARE TO BE SHORTENED 6" AT BELL JOINTS.
4. SEE STANDARD SHEET RCF-01-04 FOR GENERAL INFORMATION.

LATEST REVISION DATE :

APPROVED BY :

STANDARD DESIGN

FLUME BELL JOINTS

FOR

REINFORCED CONCRETE FLUMES - 6′ & 8′ SPANS

IOWA DEPARTMENT OF TRANSPORTATION - HIGHWAY DIVISION

JANUARY, 2004

FBJ-02-04

FBJ0204.SD1 - THIS SHEET ISSUED 01-04.

XXXXXXXXXXSYSTEMTIME XXXXXXXUSERNAME XXXXXXXXXXXXXXXXXXXXXXXXXXXXXXXXXXXXXXXXXXXXXXXXXXXXXXXXXXXXXXXXXXXXDGNSPEC