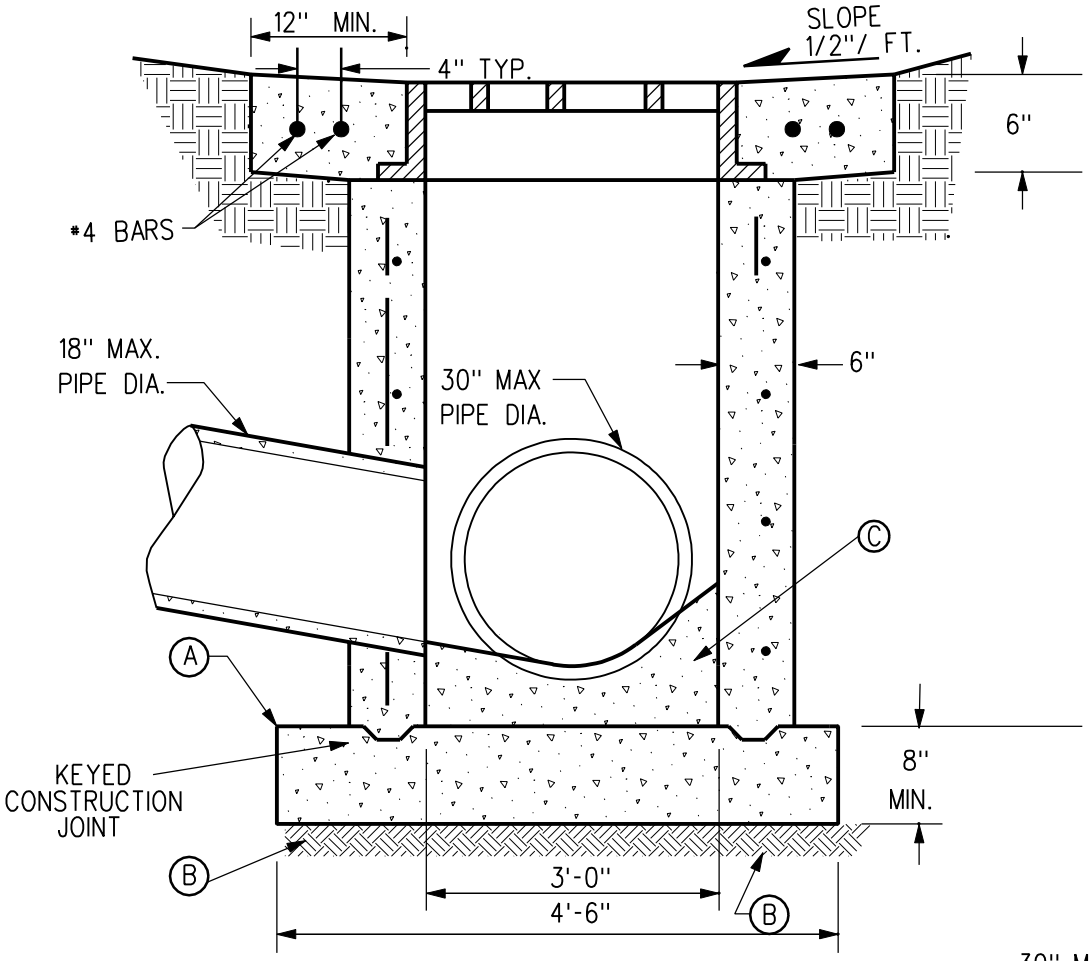

SECTION A-A

NOTE REFERENCE

Ⓐ CONCRETE BASE - POURED IN PLACE OR PRECASTED

Ⓑ UNDISTURBED SOIL

Ⓒ CONCRETE SHAPED INVERT

REINFORCEMENT:

1. WALLS - #4 BARS AT 15" BOTH WAYS.
2. DIAGONAL BARS AT ALL CIRCULAR OPENINGS.

PIPE SIZE:

MAXIMUM ALLOWABLE PIPE DIAMETERS SHOWN ARE FOR CAST-IN-PLACE STRUCTURES. FOR PRECAST STRUCTURES, THE MAXIMUM ALLOWABLE DIAMETER SHALL BE ONE (1) STANDARD PIPE SIZE SMALLER THAN THOSE SHOWN. ACTUAL PIPE SIZE SHALL BE AS SHOWN THE PLANS

FOR ADDITIONAL DETAILS SEE SHEET 2.

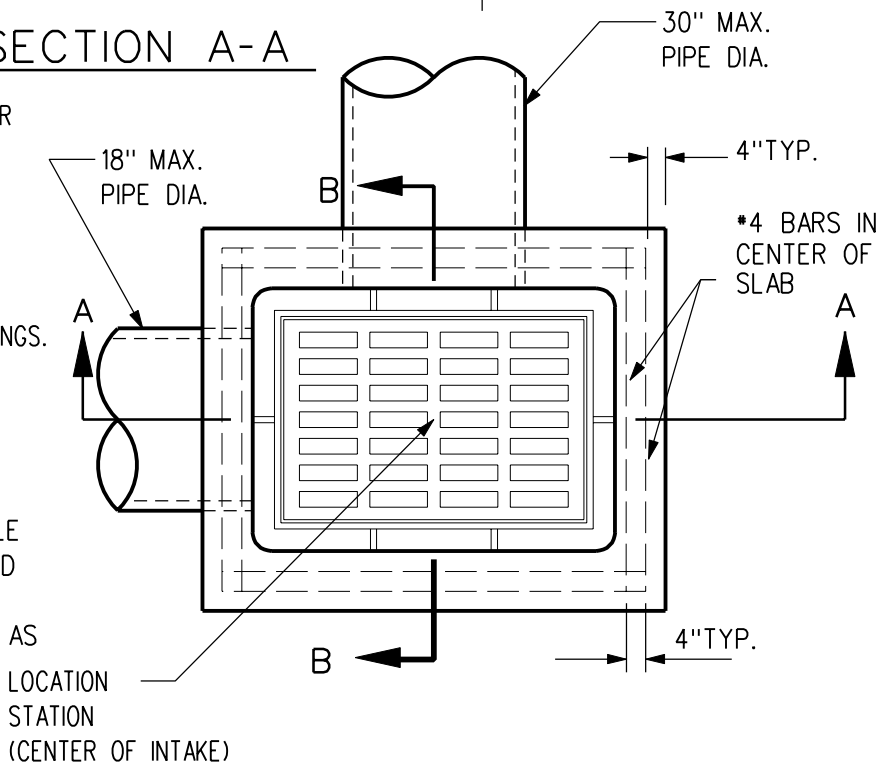

PLAN

REV.	DATE	BY
3	10/19/04	

DATE: 01-01-98

AREA, TYPE "M-H" INTAKE

FIGURE: 6030.9

SHEET 1 OF 2

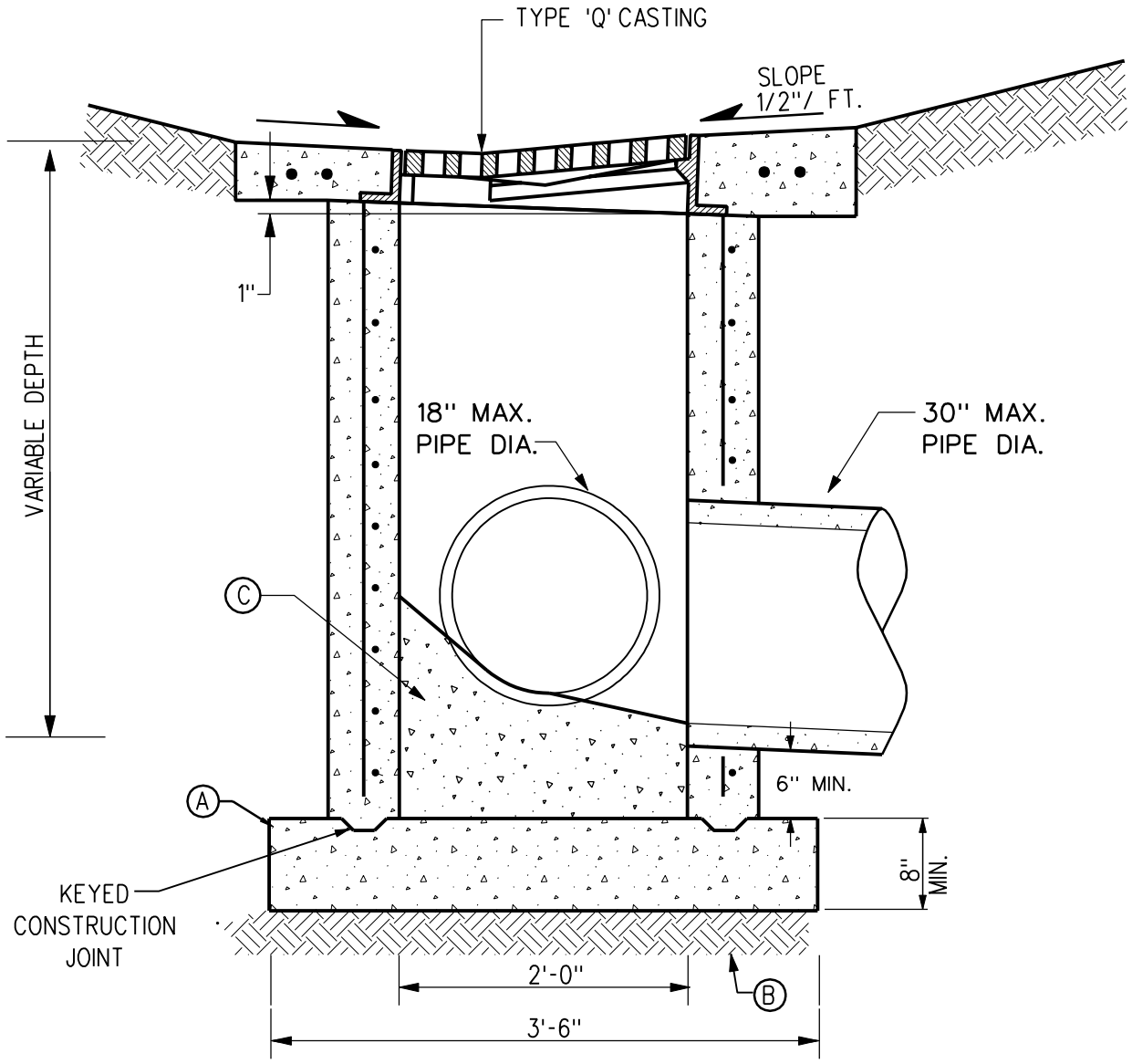

SECTION B-B

3	10/19/04			
REV.	DATE	BY	AREA, TYPE "M-H" INTAKE	FIGURE: 6030.9
DATE: 01-01-98				SHEET 2 OF 2