DOWEL HEIGHT AND DIAMETER		
(T)	(DH) (4)	Diameter
180-190 mm	90 mm	20 mm
200-240 mm	110 mm	30 mm
250-290 mm	135 mm	35 mm
300-330 mm	160 mm	35 mm

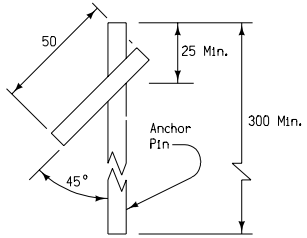

ANCHOR PIN DETAILS (6)

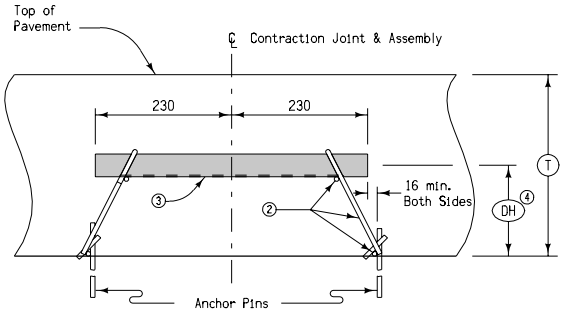

LONGITUDINAL SECTION

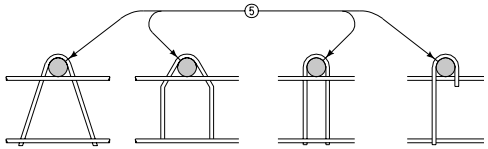

OPTIONAL LEG ASSEMBLES

GENERAL NOTES:

Dowel bars shall be 457 mm long with a tolerance of +- 3 mm. The centerline of individual dowels shall be parallel to the other dowels in the assembly within +- 3 mm.

Wire sizes shown are the minimum required, and the wires shall have a minimum tensile strength of 345 MPa.

(1) Weld alternately thru-out.

(2) #1/0 gauge (8 mm diameter) wire

(3) (3) #10 gauge (4 mm diameter) wire, tie wire welded or friction fit to top longitudinal wire, both sides.

(4) Measured from the centerline of dowel bar to bottom of support wire +5 mm.

(5) Diameter of bend around dowel is dowel diameter +3 mm to 5 mm.

(6) Anchor pins shall be #1/0 gauge (8mm diameter) wire and shall prevent movement of assembly during construction.

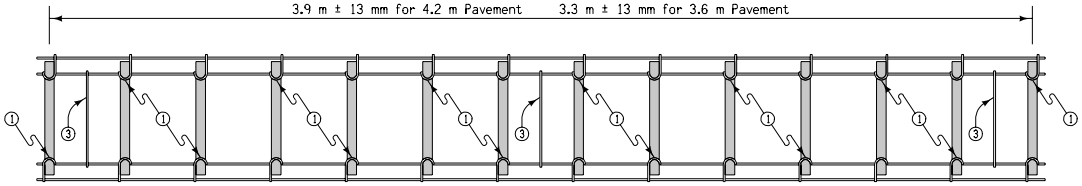

PLAN VIEW

Spaces between dowel bars are nominal dimensions with a 6 mm allowable tolerance.

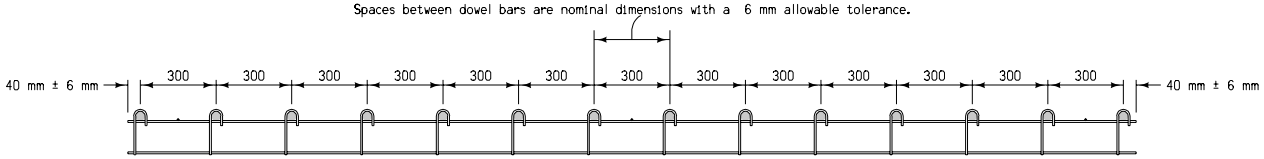

ELEVATON

All dimensions given in millimeters unless noted.

M	Iowa Department of Transportation *Highway Division*	
METRIC VERSION	STANDARD ROAD PLAN	RH-55
	REVISION: Plan View, change 3.6 m to 3.9 m (for 4.2 m pave.), & 3.0 m to 3.3 m (for 3.6 m pave.)	REVISION NO. 6
	APPROVED BY DESIGN METHODS ENGINEER	REVISION DATE 10-19-04
	FABRICATION DETAILS CONTRACTION JOINT DOWEL ASSEMBLY	