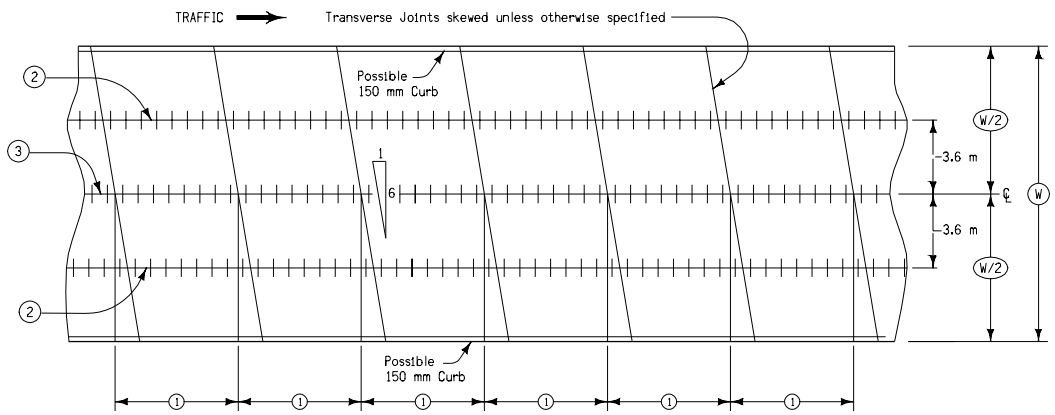

TYPICAL PAVEMENT PLAN

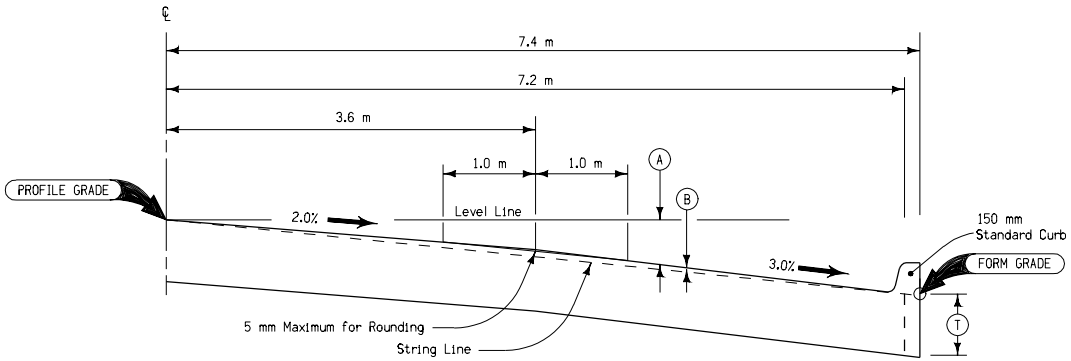

TYPICAL CROSS SECTION

GENERAL NOTES:

Contract Item:

Standard or Slip-Form PCC Pavement

1. Transverse Joint spacing (normal) 6.0 meters for 'CD' joint, 4.5 meters for 'C' joint.
2. Joints will be: 'L–1' or 'BT–1' for T less than 200 millimeters and 'L–2' or 'KT–2' for T greater or equal to 200 millimeters.
3. Joint will be modified 'BT–1' with specified bar spacing for T less than 200 milimeters and 'KT–2' or 'KT–3' for T greater than or equal to 200 millimeters. See table for detail of bar spacing.

PER STATION DESIGN VALUES FOR FULL WIDTH PAVEMENT SECTION													
(W)	ITEM	UNIT	T=150	T=160	T=170	T=180	T=190	T=200	T=210	T=220	T=230	T=240	T=250
14.4 m	Section Area	m^2	2.160	2.304	2.448	2.592	2.736	2.880	3.024	3.168	3.312	3.456	3.600
	Concrete Volume	m^3	216.0	230.4	244.8	259.2	273.6	288.0	302.4	316.8	331.2	345.6	360.0
	Surface Area	m^2	1440	1440	1440	1440	1440	1440	1440	1440	1440	1440	1440
14.8 m *	Section Area	m^2	2.269	2.417	2.565	2.713	2.861	3.009	3.157	3.305	3.453	3.601	3.749
	Concrete Volume	m^3	226.9	241.7	256.5	271.3	286.1	300.9	315.7	330.5	345.3	360.1	374.9
	Surface Area	m^2	1480	1480	1480	1480	1480	1480	1480	1480	1480	1480	1480
Centerline Joint (3)			'BT-1' 600 mm spacing					'KT-2'					

* Quantities include 150 mm Standard curb

OFFSETS FOR 14.4 m AND 14.8 m PAVEMENTS WITH 150 mm STANDARD CURB													
(W)	Distance From ℄		0 m	1.0 m	2.0 m	3.0 m	3.6 m	4.0 m	5.0 m	6.0 m	7.0 m	7.2 m	7.4 m
14.4 & 14.8 m	(A)	mm	0	20	40	60	72	84	114	144	174	180	186
14.4 m	(B)	mm	0	5	10	15	18	16	11	6	1	0	---
14.8 m	(B)	mm	0	5	10	15	18	17	12	7	2	1	0

For joint details, see Standard Road Plans RH-50, RH-51, and RH-52.

All dimensions given in millimeters unless noted.

M

METRIC VERSION

Iowa Department of Transportation
Highway Division

STANDARD ROAD PLAN | **RH-43**

REVISION: Rename Construction Progress to Traffic.

REVISION NO. 7

REVISION DATE 04-20-04

William J. Stein
APPROVED BY DESIGN METHODS ENGINEER

NON-REINFORCED FOUR LANE
14.4 m or 14.8 m
P.C. CONCRETE PAVEMENT