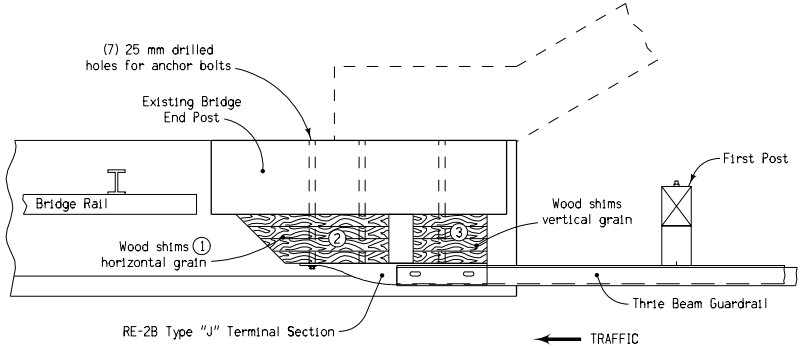

PLAN

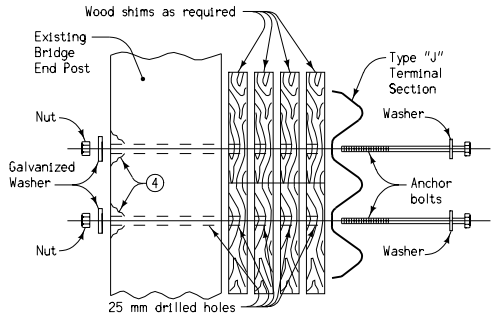

TYPICAL ATTACHMENT DETAIL

GENERAL NOTES:

Pressure preservative treated wood shims, drilled and fitted as shown.

Contract Item:

Guardrail, End Anchorage, Beam, RE-27B

List of Materials for the RE-27B End Anchorage:

(7) Approved 22 millimeter x sufficient length Hex Bolts
(7) Approved Plain Washers, 24 millimeter Regular
(7) Galvanized Steel Washers (100 mm x 100 mm x 10 mm)
(7) Approved 22 mm Hex Nuts
(1) RE-2B Type "J" Terminal Section

① When shim thickness is greater than 50 millimeters, a 45° taper will be required on the approach side.

② Wood shim – (2) 300 millimeter nominal width x 500 millimeter minimum length x variable thickness.

③ Wood shim – 300 millimeter nominal width x 575 millimeter length x variable thickness.

④ Area on back face spalled in drilling hole will be grouted before placement of washer for bolt installation. The grout shall consist of equal parts by weight of P.C.C. and concrete sand, mixed with sufficient water to form a paste.

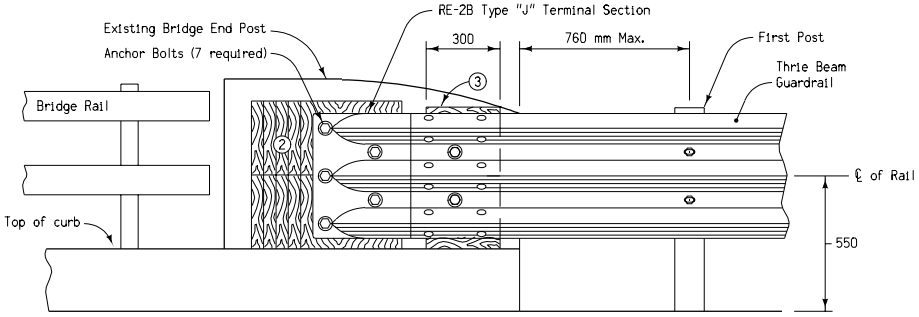

ELEVATION

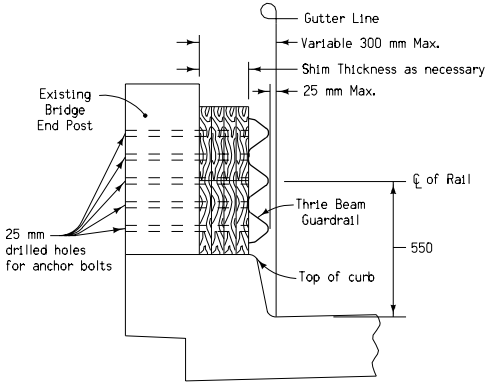

TYPICAL SECTION

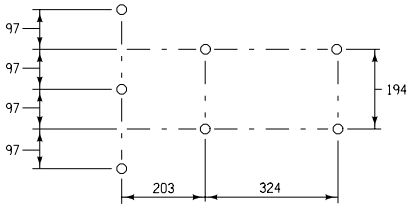

BOLT PATTERN

For RE-2B Type "J" Terminal Section

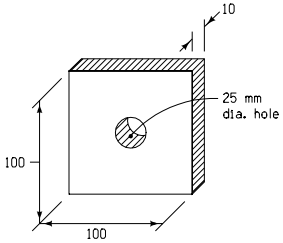

DETAIL OF GALVANIZED STEEL WASHER

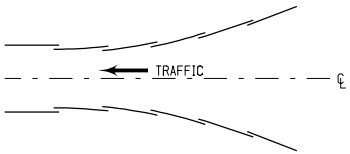

LAPPING PROCEDURE

All dimensions given in millimeters unless noted.

M

METRIC VERSION

Iowa Department of Transportation
Highway Division

STANDARD ROAD PLAN **RE-27B**

REVISION: Remove hardware information already in the Specifications Book.	REVISION NO.
	6
	REVISION DATE
	10-19-04

William J. Stein
APPROVED BY DESIGN METHODS ENGINEER

DETAILS OF THRIE BEAM GUARDRAIL BRIDGE CONNECTION