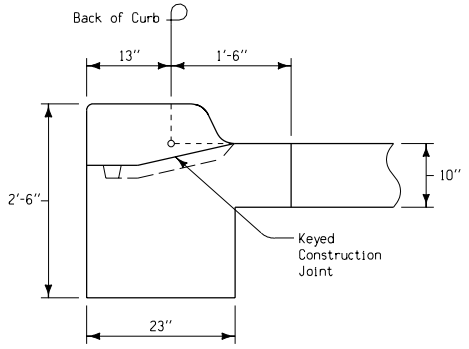

SECTION A-A

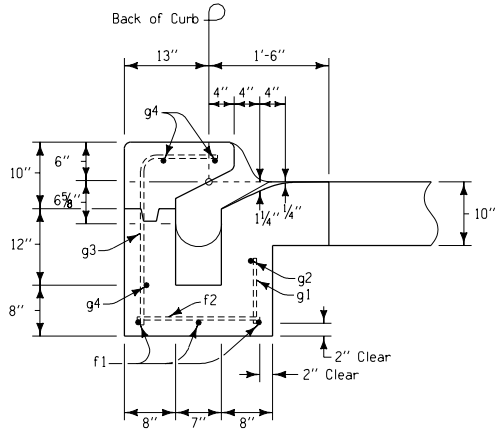

SECTION B-B

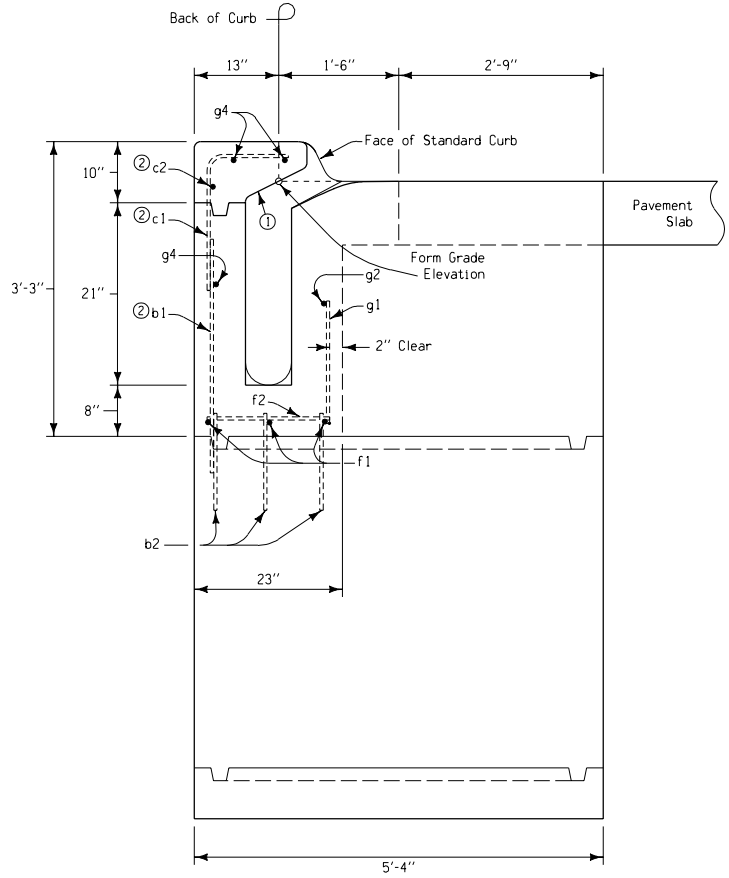

SECTION C-C

① 2:1 Slope (Horizontal:Vertical)
② See Standard Road Plan RA-41 for reinforcing.

Iowa Department of Transportation
Project Development Division

STANDARD ROAD PLAN RA-42(2)

REVISION: Replaces Standard Road Plan RA-7.

REVISION NO.
New
REVISION DATE
02-11-00

11-05-99
APPROVED BY DESIGN METHODS ENGINEER

INTAKE EXTENSION UNIT
(FOR STANDARD RA-41 INTAKE)
(SHEET 2 OF 3)