Typical Entrance Cross Section

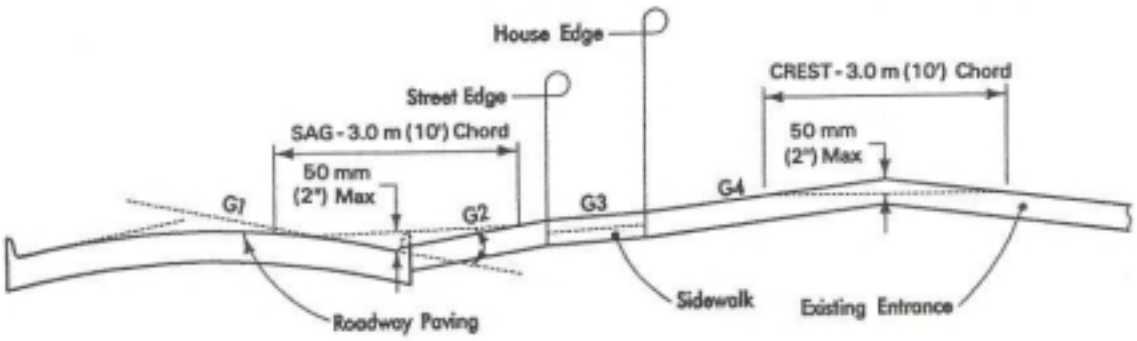

SECTION-TYPICAL ENTRANCE

g1 & g2-Algebraic difference bertween g1 and g2 shall not exceed 15%.

g3-Slope 1 mm per 50 mm (1/4" per foot)

g4-Slope (maximum) 10.0% commercial
13.5% all others
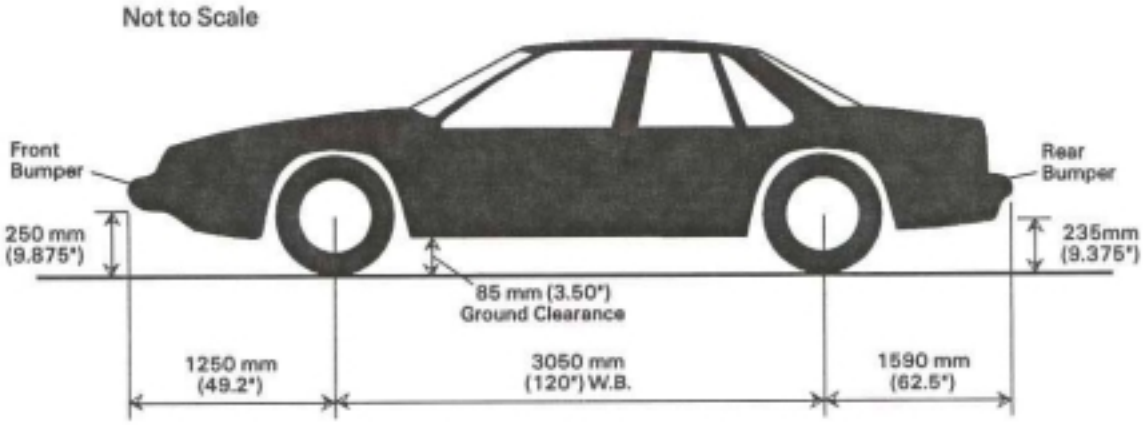
Typical Design Vehicle