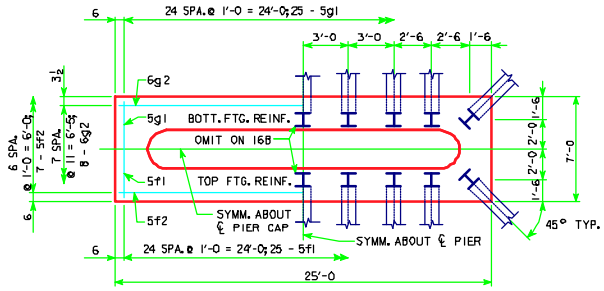

16B 18D

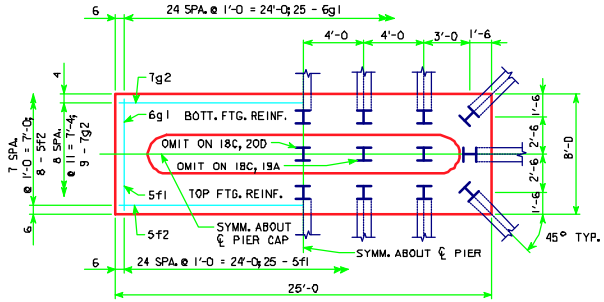

18C 19A 20D

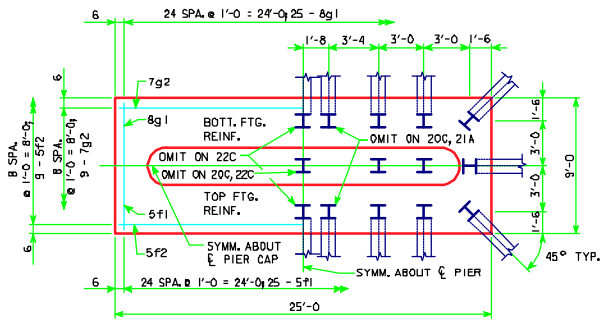

20C 21A 22C

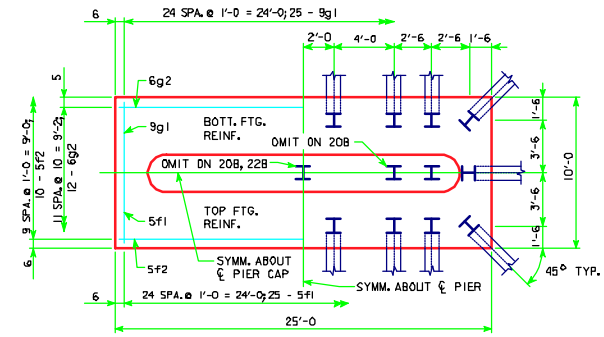

20B 22B 23A

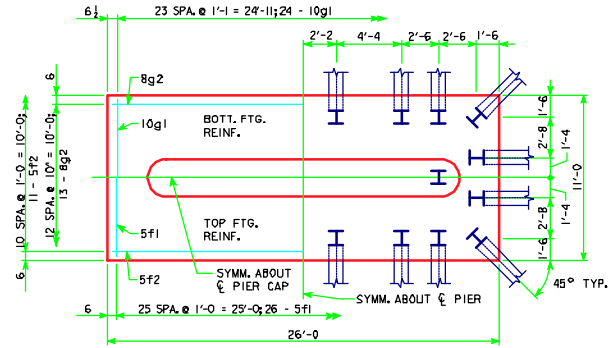

22A

LATEST REVISION DATE

APPROVED BY BRIDGE ENGINEER

Iowa Department of Transportation
Highway Division

STANDARD DESIGN - 40' ROADWAY, 3 SPAN BRIDGES

ROLLED STEEL BEAM BRIDGES

FEBRUARY, 2004

T PIER 0° SKEW
STEEL PILE FOOTINGS
SHEET 2 OF 3

RS40-PR3-04