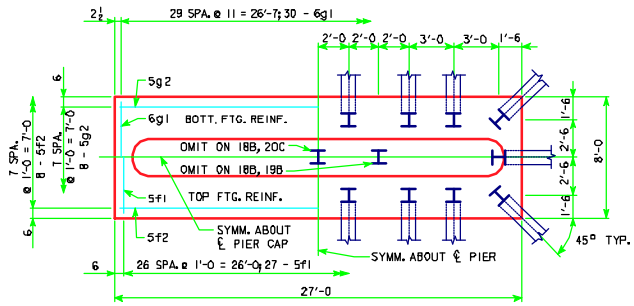

18B 19B 20C

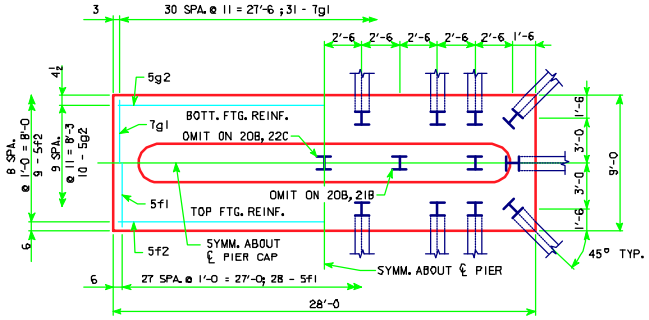

20B 21B 22C

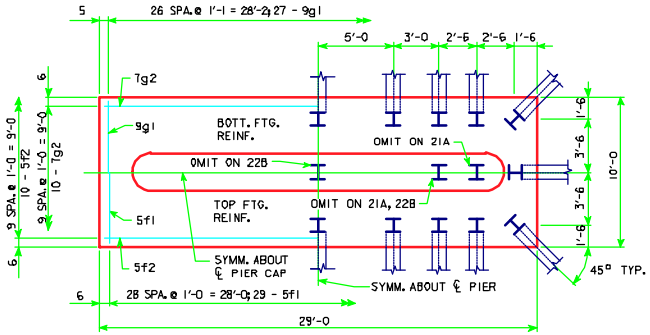

21A 22B 25B

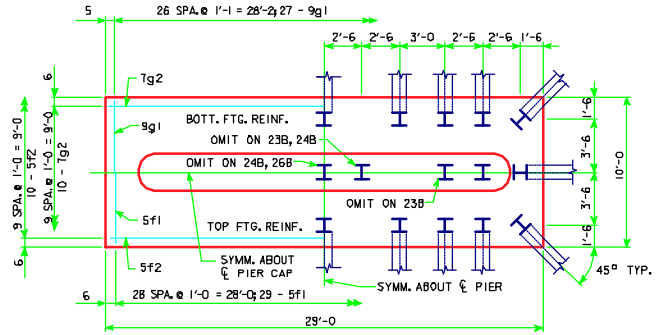

23B 24B 26B

LATEST REVISION DATE

APPROVED BY BRIDGE ENGINEER

Iowa Department of Transportation
Highway Division

STANDARD DESIGN - 40' ROADWAY, 3 SPAN BRIDGES

ROLLED STEEL BEAM BRIDGES

FEBRUARY, 2004

T PIER 30° SKEW STEEL PILE FOOTINGS

SHEET 2 OF 3

RS40-PR15-04