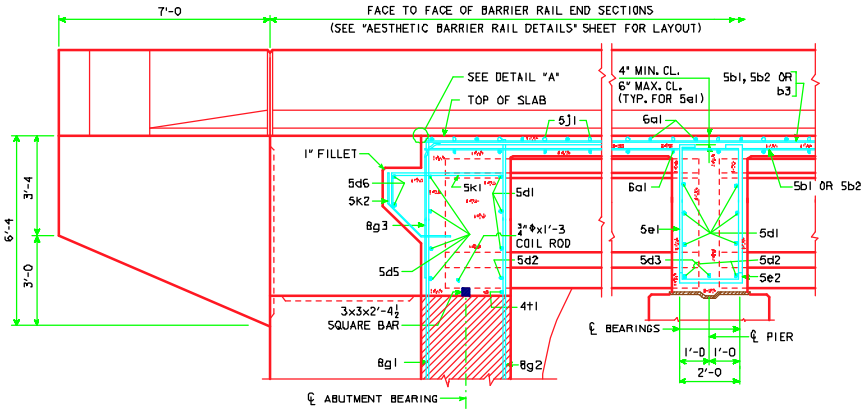

PART LONGITUDINAL SECTION NEAR GUTTER

NOTE: FOR DETAILS OF INTERMEDIATE DIAPHRAGMS SEE "STEEL INTERMEDIATE DIAPHRAGM DETAILS" SHEET

DETAIL "A"

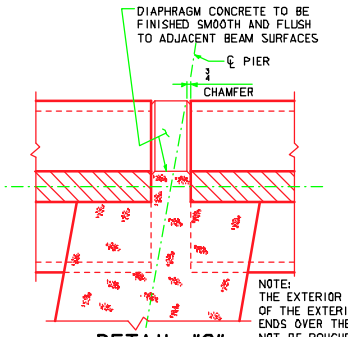

NOTE:
THE EXTERIOR SURFACES OF THE EXTERIOR BEAM ENDS OVER THE PIER SHALL NOT BE ROUGHENED.

DETAIL "C"

PART PLAN AT ENDS OF PIER DIAPHRAGM

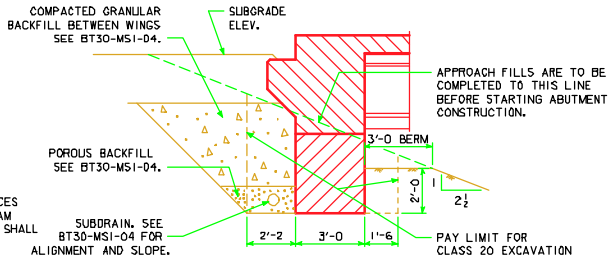

ABUTMENT EXCAVATION DETAILS

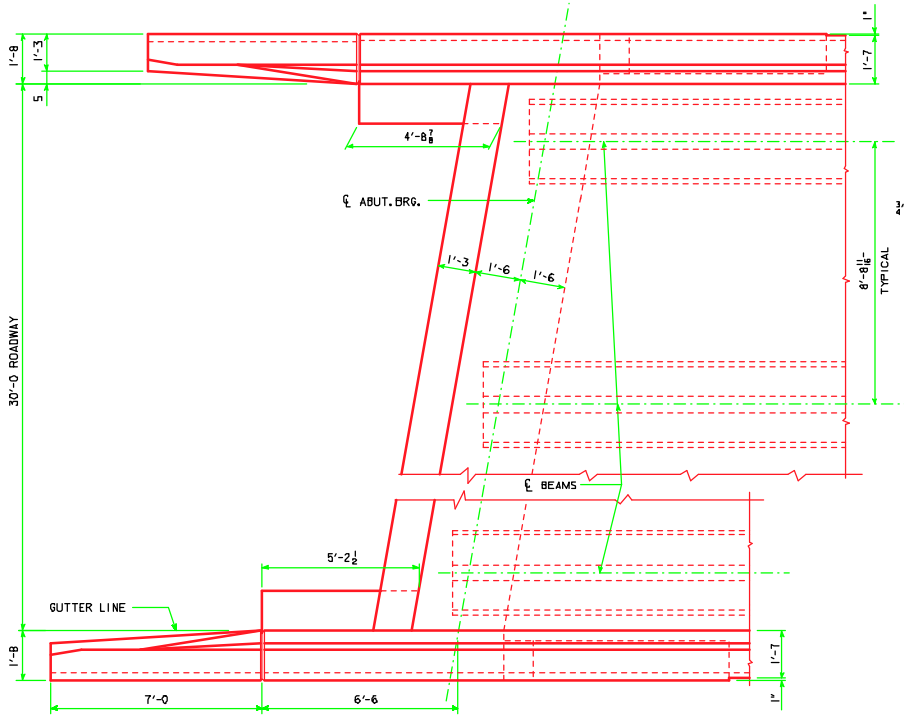

PART PLAN

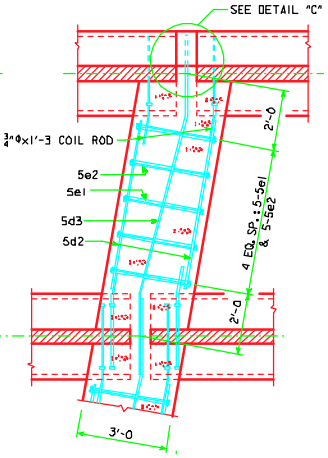

PART SECTION AT PIER

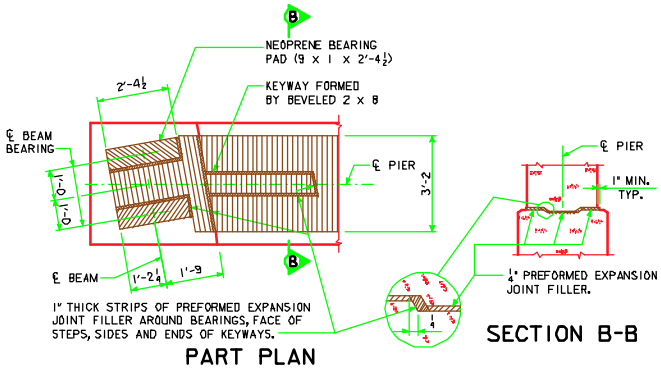

PART PLAN TOP OF PIER DETAILS

SECTION B-B

LATEST REVISION DATE

APPROVED BY BRIDGE ENGINEER

Iowa Department of Transportation
Highway Division

STANDARD DESIGN - 30' ROADWAY, 2 SPAN BRIDGES

PRETENSIONED PRESTRESSED BULB TEE CONCRETE BEAM BRIDGES

ALL SPANS — JULY, 2004

LONGITUDINAL SECTION DETAILS

10° SKEW

BT30-LS3-04