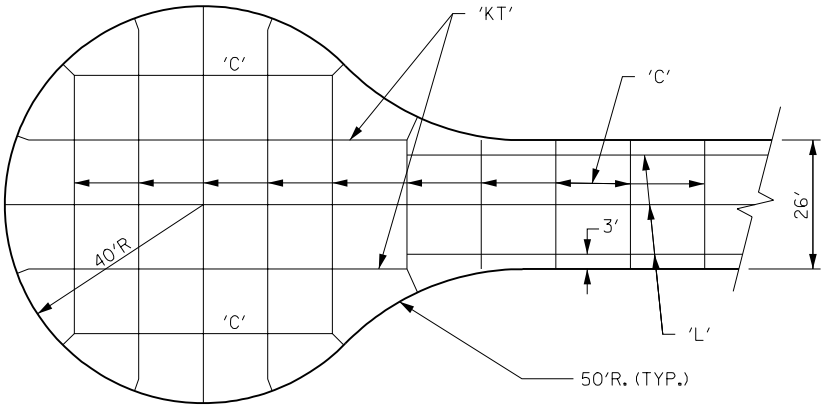

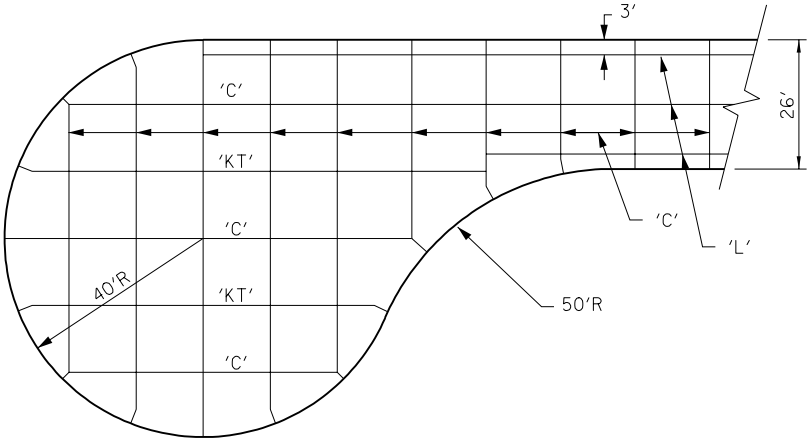

REV.	DATE	BY	CUL-DE-SAC JOINT LOCATIONS P.C. CONCRETE PAVEMENT	FIGURE: 7010.3
DATE: 01-01-98				SHEET 1 OF 1