REV.	DATE	BY

DATE: 01-01-98

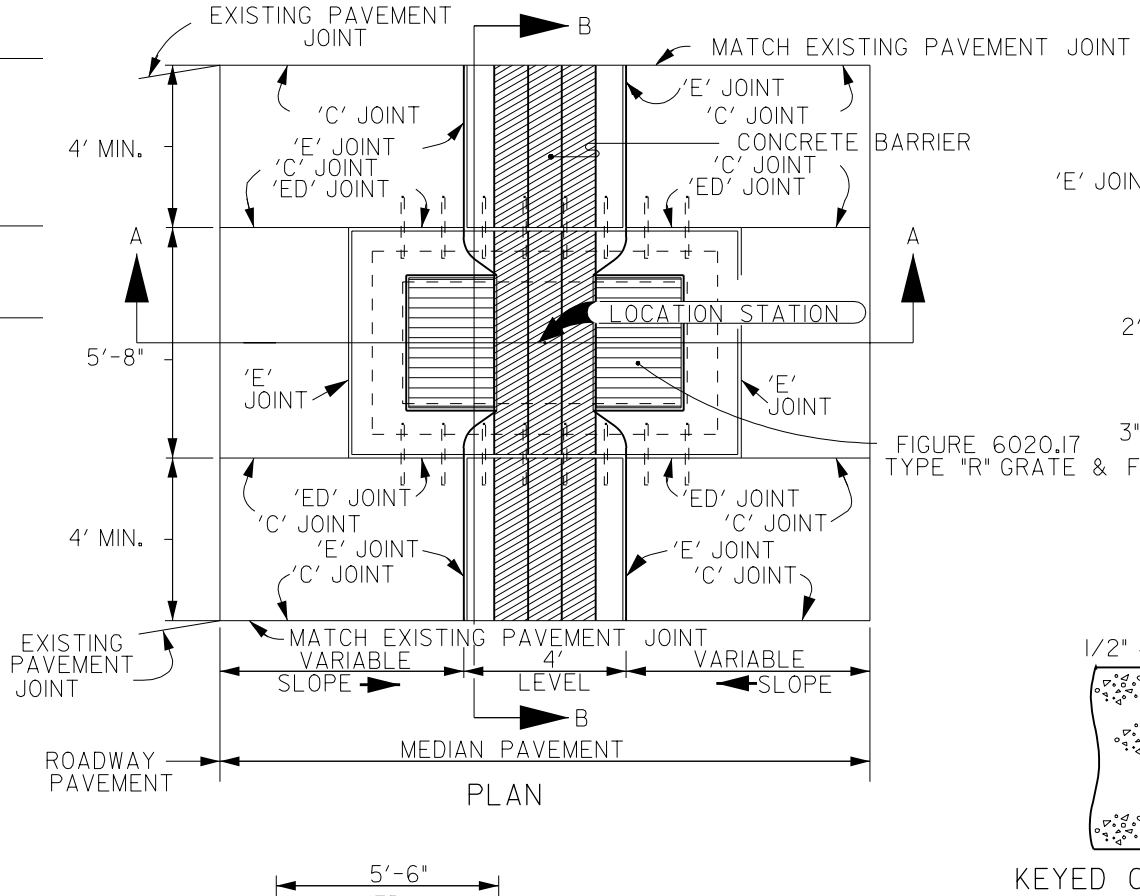

PLAN

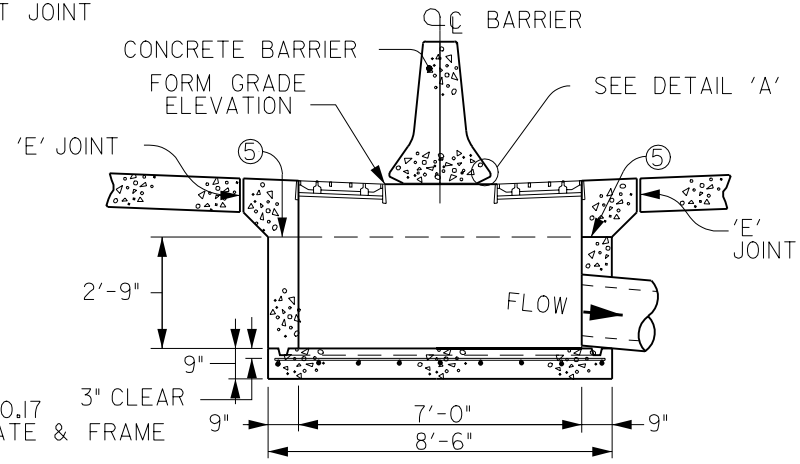

SECTION A-A

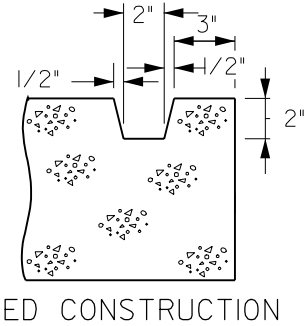

KEYED CONSTRUCTION JOINT DETAIL

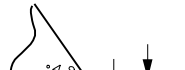

DETAIL 'A'

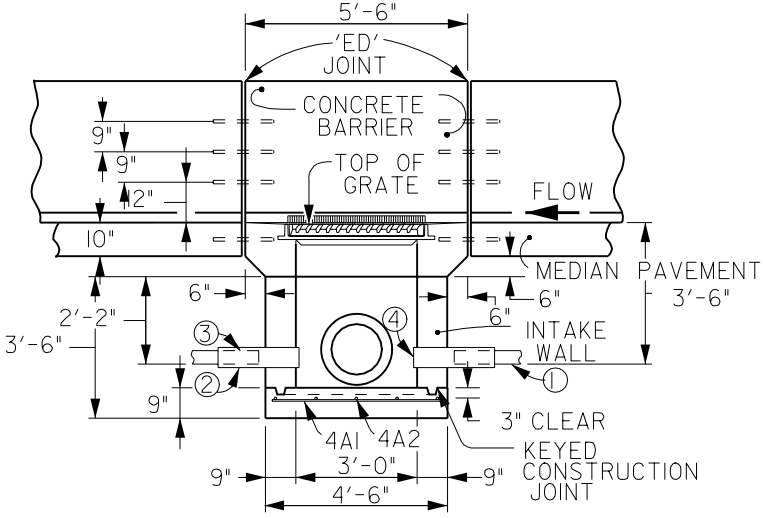

SECTION B-B

REINFORCING BAR LIST							
BAR	LOCATION	SHAPE	NO.	LENGTH	LIN.FT.	WEIGHT	SPACING
4A1	BASE	——	9	4'-0"	36	24	1'-0"
4A2	BASE	——	5	8'-0"	40	26.7	1'-0"
					TOTAL	50.7	

1. 4" PERFORATED SUBDRAIN (POLYETHYLENE CORRUGATED TUBING)
2. 6" CMP 2' LONG
3. PERFORATED SUBDRAIN FITS INTO CMP MINIMUM 12" IF GROUT IS USED. AT CONTRACTOR'S OPTION USE REDUCING COUPLER OR GROUT
4. REMOVABLE MESH CAP 3/8" HARDWARE CLOTH
5. TROWEL SMOOTH AND PLACE SUBGRADE PAPER TO PREVENT BOND

MEDIAN INTAKE

FIGURE: 6030.12

SHEET 1 OF 1