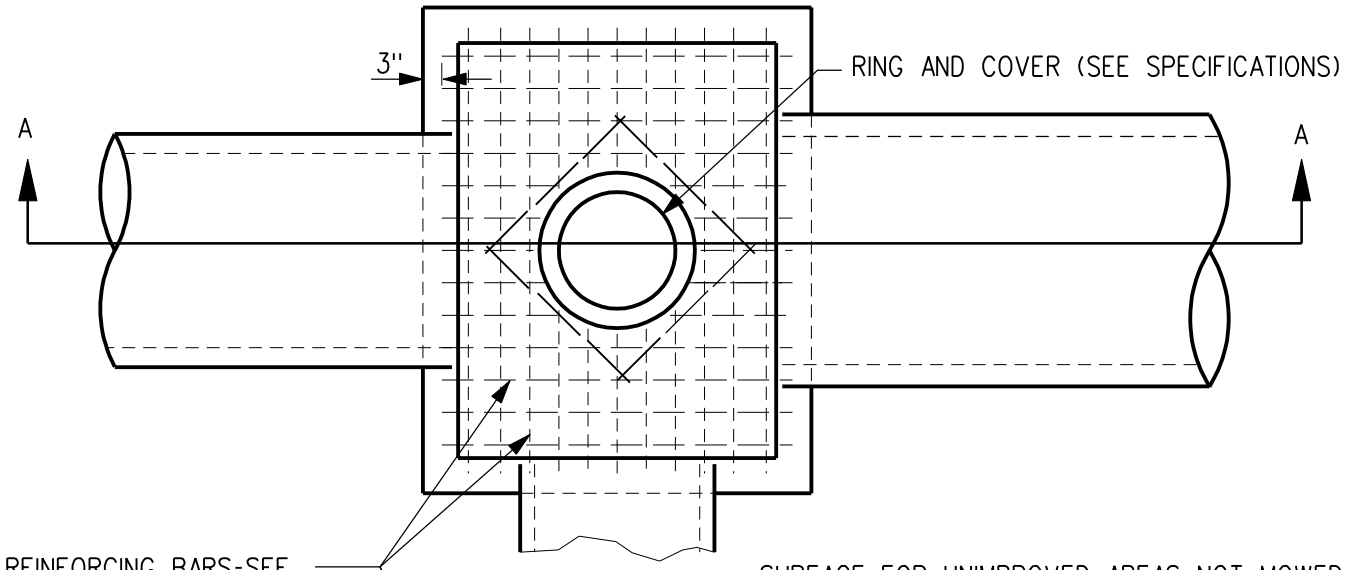

PLAN

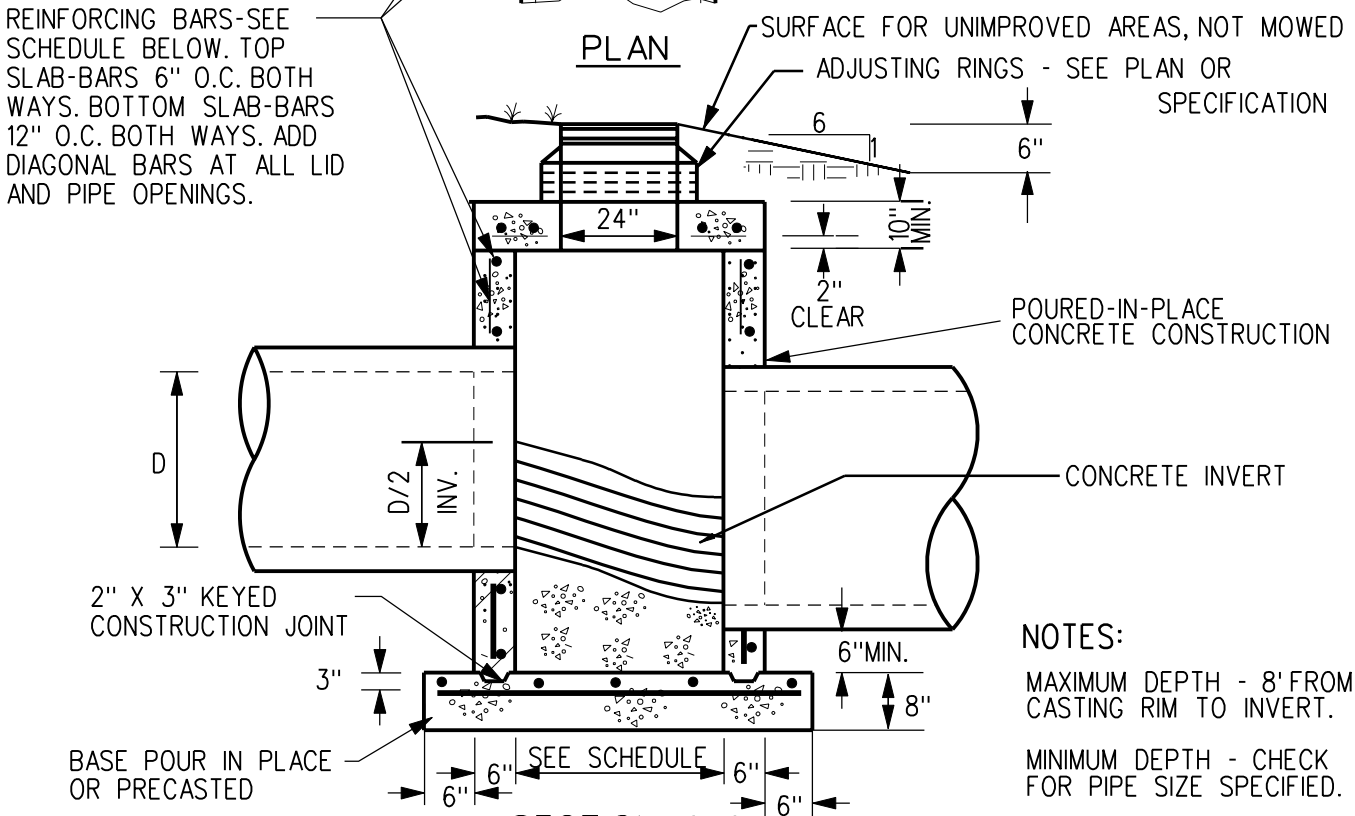

SECTION A-A

NOTES:

MAXIMUM DEPTH - 8' FROM CASTING RIM TO INVERT.

MINIMUM DEPTH - CHECK FOR PIPE SIZE SPECIFIED.

MIN. MANHOLE SIZE AND STEEL SCHEDULE

PIPE SIZE INSIDE DIA.	MIN. INSIDE DIM. *	BAR SIZE UNDER PAVEMENT	BAR SIZE NOT UNDER PAVEMENT
54"	72"	6	5
48"	64"	6	5
42"	56"	5	5
36"	56"	5	4
30"	48"	4	4
24"OR LESS	40"	4	4
NONE	40"	4	4

* CORRESPONDING SIDE

REV.	DATE	BY	TYPE "M-B" MANHOLE (STORM SEWER)	FIGURE: 6020.13
2	01/29/03			
DATE: 01-01-98				SHEET 1 OF 1