NOTE:
℄ LOWEST NOZZLES MUST BE AT LEAST 1'-6" AND NOT MORE THAN 1'-11" ABOVE FINISH GRADE.

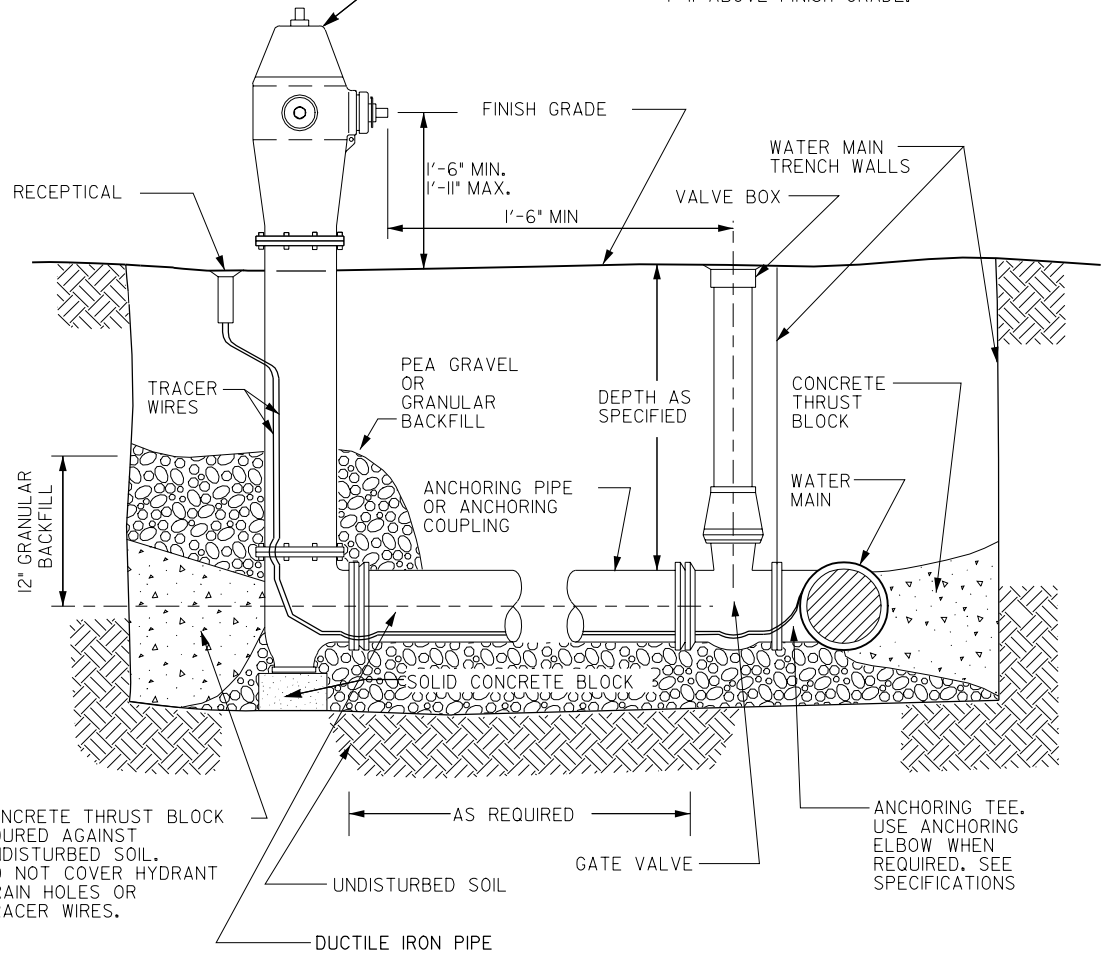

NOTES:

1. WRAP FIRE HYDRANT, PIPE, VALVE, VALVE BOX AND TEE OR ELBOW IN PLASTIC AS SPECIFIED.
2. INSTALL TRACER WIRE AS SHOWN ON DETAILED DRAWING "TRACER WIRE DETAIL."
3. APPLY POLYETHYLENE ENCASEMENT ON PIPE, VALVE, VALVEBOX FIRE HYDRANT AND FITTINGS.

SEE SHEET 2 FOR ADDITIONAL DETAILS.

REV.	DATE	BY		
1	01/25/01		FIRE HYDRANT DETAIL - ELEVATION	FIGURE: 5020.1
DATE: 01-01-98				SHEET 1 OF 2

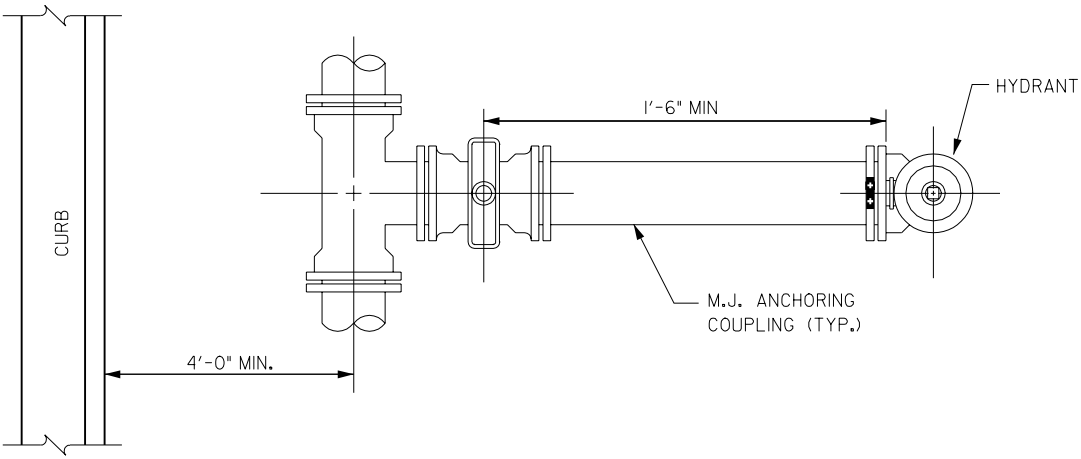

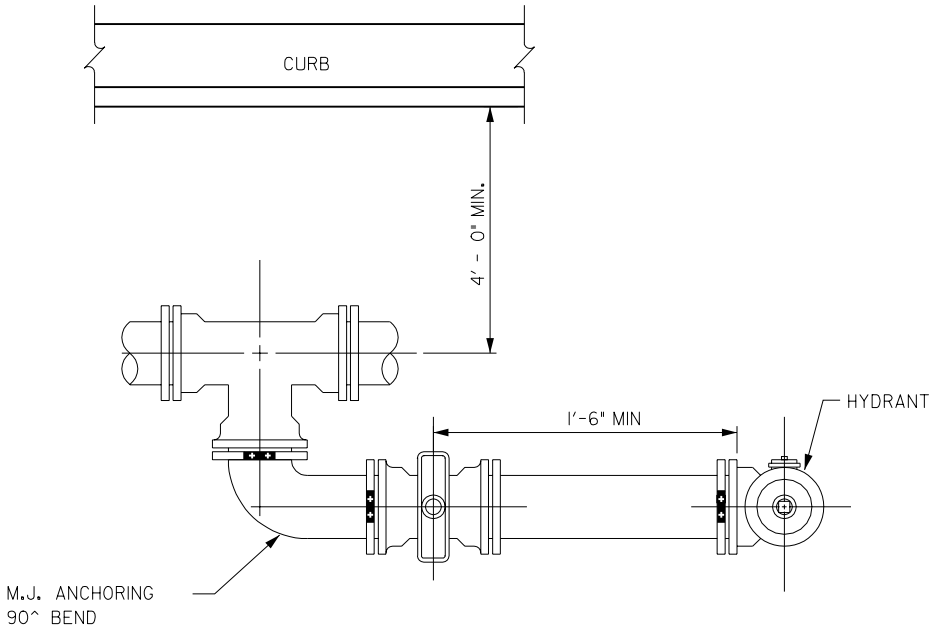

ALTERNATE LAYOUT
(TO BE USED ONLY WHERE AUTHORIZED)

1	01/25/01			
REV.	DATE	BY	FIRE HYDRANT DETAIL - PLAN	FIGURE: 5020.1
DATE: 01-01-98				SHEET 2 OF 2