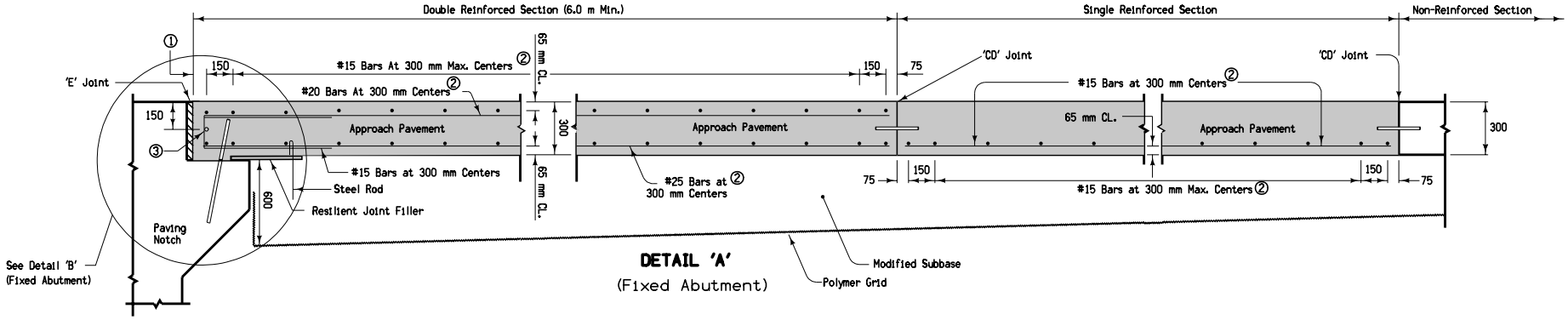

DETAIL 'A'
(Fixed Abutment)

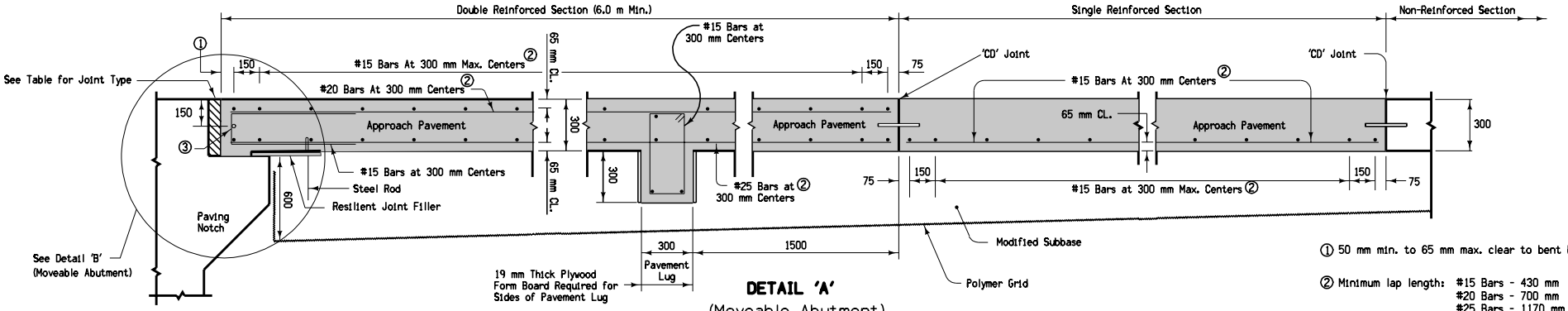

DETAIL 'A'
(Moveable Abutment)

① 50 mm min. to 65 mm max. clear to bent bar.

② Minimum lap length: #15 Bars - 430 mm
#20 Bars - 700 mm
#25 Bars - 1170 mm

③ If bridge is skewed, place additional #15 bar parallel to skewed face.

JOINT TYPE FOR MOVEABLE ABUTMENT BRIDGES

Joint	Maximum Bridge Length	
	Concrete Beam or Slab	Steel Girder
CF-1	112.5 m	76.2 m
CF-2	141.7 m	97.5 m
CF-3	175.3 m	121.9 m

Contract item:

Bridge Approach, RK-20

Tabulation: 112-6

All dimensions given in millimeters unless noted.

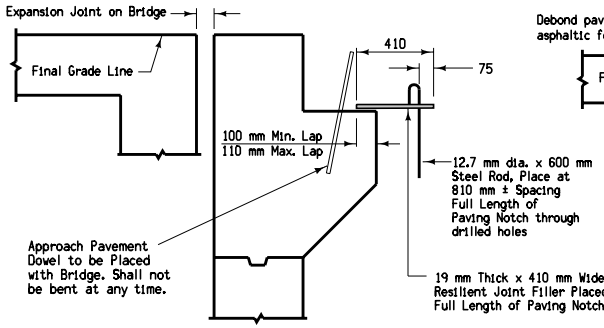

DETAIL 'B' (Fixed Abutment)

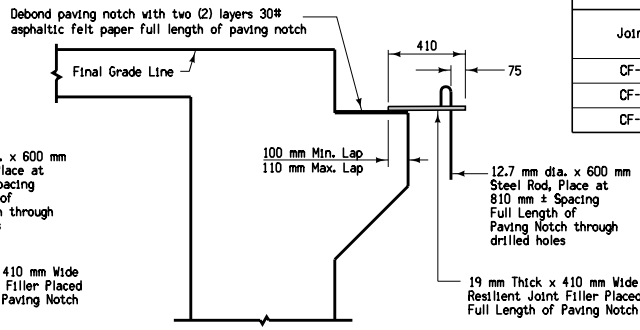

DETAIL 'B' (Moveable Abutment)

All Transverse Bars are #15.

For joint details, see Standard Road Plans RH-50, RH-51, and RH-52.

M

METRIC VERSION

Iowa Department of Transportation

STANDARD ROAD PLAN

REVISION	
4	10-16-07

RK-20(1)

SHEET 1 of 1

REVISIONS: Modified table text for clarity.

Deanna Maifield
APPROVED BY DESIGN METHODS ENGINEER

DOUBLE REINFORCED 300 mm APPROACH

(Sheet 1 of 3)